NRC-CNRC

NRC Publications Archive
Archives des publications du CNRC

Attempts to delay flow-detachment, with potential application to centrifugal compressor rotor blades

Fowler, H. S.

For the publisher's version, please access the DOI link below./ Pour consulter la version de l'éditeur, utilisez le lien DOI ci-dessous.

Publisher's version / Version de l'éditeur:
https://doi.org/10.4224/40003819
Laboratory Memorandum (National Research Council Canada. Division of Mechanical Engineering. Engine Laboratory); no. NRC-ENG-62, 1969-04

NRC Publications Archive Record / Notice des Archives des publications du CNRC :
https://nrc-publications.canada.ca/eng/view/object/?id=1b9ae44b-0d41-4add-ab73-10a538edb93
https://publications-cnrc.canada.ca/fra/voir/objet/?id=1b9ae44b-0d41-4add-ab73-10a538edb936

Access and use of this website and the material on it are subject to the Terms and Conditions set forth at
https://nrc-publications.canada.ca/eng/copyright
READ THESE TERMS AND CONDITIONS CAREFULLY BEFORE USING THIS WEBSITE.

L'accès à ce site Web et l'utilisation de son contenu sont assujettis aux conditions présentées dans le site
https://publications-cnrc.canada.ca/fra/droits
LISEZ CES CONDITIONS ATTENTIVEMENT AVANT D'UTILISER CE SITE WEB.

Questions? Contact the NRC Publications Archive team at PublicationsArchive-ArchivesPublications@nrc-cnrc.gc.ca. If you wish to email the authors directly, please see the first page of the publication for their contact information.

Vous avez des questions? Nous pouvons vous aider. Pour communiquer directement avec un auteur, consultez la première page de la revue dans laquelle son article a été publié afin de trouver ses coordonnées. Si vous n'arrivez pas à les repérer, communiquez avec nous à PublicationsArchive-ArchivesPublications@nrc-cnrc.gc.ca.

L.O. 14560A	**NATIONAL RESEARCH COUNCIL**	NO. NRC-ENG-62
FILE M2-17-13.C-19	**DIVISION OF MECHANICAL ENGINEERING** OTTAWA, CANADA	PAGE 1 OF 15
PREPARED BY H.S.F.	**LABORATORY MEMORANDUM**	COPY NO.
CHECKED BY E.P.C.	**SECTION** Engine Laboratory	DATE April 1969

SECURITY CLASSIFICATION Open

SUBJECT Attempts to Delay Flow-Detachment, with Potential Application to Centrifugal Compressor Rotor Blades

PREPARED BY H.S. Fowler

ISSUED TO

THIS MEMORANDUM IS ISSUED TO FURNISH INFORMATION IN ADVANCE OF A REPORT. IT IS PRELIMINARY IN CHARACTER, HAS NOT RECEIVED THE CAREFUL EDITING OF A REPORT, AND IS SUBJECT TO REVIEW.

Table of Contents

LIST OF ILLUSTRATIONS

1.0 INTRODUCTION

An experimental investigation on the flow in centrifugal impellers has been in progress in the Engine Laboratory since 1963. Both in the channels of a large-scale model impeller, and in simplified flat channels, it has become very clear that the detachment of the flow from one blade surface is one of the major influences on the poor distribution of flow in the impeller channels.

Since July 1968 experiments have been carried out on various methods of flow control, in an attempt to delay or prevent this flow detachment.

This memo presents a progress report on these experiments.

2.0 AIM OF INVESTIGATION

It is desired to obtain a better understanding of the surface-flow detachment from the blade surfaces, and to seek means of delaying or preventing the detachment. The methods to be investigated must be suitable for use in the impeller of a real machine, since the ultimate aim is to raise the efficiency and broaden the operating range of centrifugal compressors.

3.0 SELECTION OF SYSTEMS TESTED

There are many methods of delaying the detachment of surface flow. Broadly speaking, detachment occurs in the impeller channel for three reasons.

Firstly, rapid local diffusion in the channel may produce too high a positive pressure gradient in the boundary layer, leading ultimately to reverse flow and detachment.

Secondly, the inertial forces of rotation may force the fluid to one side of the channel, detaching the flow from the suction side.

Thirdly, excessive positive or negative incidence at the blade leading edge, due to operation far off the design point, may stall the blades. This factor is being neglected at present, and will be considered at a later stage.

The first factor, excessive diffusion rate, can be studied in a stationary diffuser, and is well understood.

The second factor can be simulated statically to some extent by bending the centreline of the channel in an arc, so that flow along the channel is affected by a centrifugal force transverse to the curved channel centreline. This permits very simple tests to be run statically for a preliminary assessment of various schemes.

Preliminary tests have therefore been run on a number of possible schemes, using a cambered aerofoil in a two-dimensional tunnel, in which the two channel walls were simulated by the two surfaces of the aerofoil. This method allowed the examination of slots passing from one side of the "wall" to the other.

A most important criterion was that the schemes selected for further examination must be stable. That is to say, that they are intended for use in a practical compressor which will encounter changes of operating condition, and probably even surge. Under these circumstances, the device must be capable of accepting an initially disturbed airflow, and stabilizing it into the required flow pattern. A device which will only retain an initially good flow, but will break down once the flow has collapsed, would not be acceptable.

4.0 STATIC TESTS

4.1 Initial Tests

Initial tests were run on a series of two-dimensional aerofoils of various cambers in the jet issuing from a 5" x 5" nozzle on a low speed blowing tunnel (Fig. 1). The aerofoils were modified by the use of slots, vortex generators, a leading edge slat, and a deflector blade. At this stage of the investigation, devices with externally powered blowing or suction, or rotating leading edges, were not considered. This was simply because such systems would be complicated to install in an actual compressor, and it was thought proper to consider the simpler systems first.

All these tests were run at zero incidence, on aerofoils with increasing degrees of camber, and the effectiveness of the detachment-delaying devices judged on the basis of wool-tuft and smoke flow visualization.

Figs. 2 and 3 show the smoke visualization of the flows around the aerofoils concerned. The first device to be tested was the simple slot, singly and with two in series. Fig. 2 shows selected photographs of the flow visualized with smoke, while Fig. 3 presents diagrams traced from photographs, showing these results for the three aerofoils tested, namely of 60°, 75°, and 90° circular arc camber. All were approximately of 10% t/c. C.4 section, and all tests were at 0° incidence. The performance, measured from these figures, is summarized below.

Camber	No Slots		One Slot		Two Slots	
	Deflection	Deviation	Deflection	Deviation	Deflection	Deviation
60°	46°	14°	46°	14°	51°	9°
75°	51°	24°	59°	16°	63°	12°
90°	66°	24°	68°	22°	74°	16°

At this stage the slots were designed purely by eye, on the well known engineering principle that "if it looks right, then it is right". Smoke visualization showed that quite an appreciable quantity of air flowed through the slot from pressure side to suction side of the wing. At a later stage in the program it will be necessary to vary the slot profile systematically, and relate this to performance and to total pressure loss in the aerofoil wake. This step was omitted in this first crude investigation.

4.2 Leading Edge Slat

As an extreme case of the slot, a leading edge slat of orthodox type was tested on the 90° camber aerofoil (Fig. 4b). So far as could be seen, this slat, which formed a slot at the nose of the aerofoil, had no influence over the flow over the trailing 50% of the aerofoil. It might have shown to advantage at high positive incidence angles (the usual role of the leading edge slat), but this was not the aim of this experiment.

4.3 Deflector

A further extreme case was the use of a simple deflector. Fig. 4c shows the deflector tried. It was a 10% C4 aerofoil of about 30° camber. It did indeed stick the flow to the convex surface of the main aerofoil, but was itself completely stalled over its convex surface. The associated losses and general flow disruption were obviously too bad for this scheme to be of any use in this connection.

4.4 Vortex Generators

Vortex generators were tried, in an attempt to get vortices to pull down a continuous supply of high energy air into the boundary layer, in the hope of keeping it attached.

On the basis of Gould's use of aerofoil-type generators on the wings of an aircraft (Ref. 1) and a note by Schubauer and Spangenberg (Ref. 2), both aerofoil and wedge type vortex generators were made.

The aerofoil type (5b) thickened the boundary layer and wake very considerably, but did not appear to reduce the deviation; if anything the deviation increased by about 4° over the value with no device.

The wedge type was tested in two arrangements, (see Fig. 5c and 5d). The reference (2) shows that such wedges are effective vortex generators both with the apex up-wind ("Triangular Plow") and in the reverse direction ("Ramp"), although their other characteristics differ slightly in the two positions.

The "Ramp" position (Fig. 5c) was tried first. While it did reduce the deviation a little more than the aerofoil vortex generators, it still thickened the wake very much, and was much less stable in operation. Disturbances were likely to detach the airstream from the convex surface of the blade.

The "Triangular Plow" type was then tried. It normally tripped the flow completely off the aerofoil, as shown in Fig. 5d. It was possible to force the flow back onto the blade, but it detached again at the slightest provocation.

4.5 Stability

This raised the question of the stability of these devices in an acute manner. At this early stage in the program an extremely crude test was devised, to separate devices into Stable, Neutral, and Unstable groups. This was a vital step, since as previously explained the aim of the program was to select devices which would perform reliably in a practical compressor, and which could reorganize the chaotic flow after a condition change or even a surge.

To make the test, the flow was set up with smoke to make it visible. If it was attached to the aerofoil, one hand was put into the tunnel like a scoop, to detach the flow by main force (Fig. 6a). When the hand was removed, if the flow promptly reattached, the configuration was considered "Stable".

If the flow refused to attach in the first place or detached while running, the hand was put in the other way (Fig. 6b) and the flow forced down onto the blade. When the hand was removed, if the flow immediately detached again, it was judged "Unstable".

If the flow remained whichever way it was pushed, after the hand was withdrawn, it was classed as Neutral.

On this showing, the Vortex Generators were Neutral, except the Triangular Plow, which was completely Unstable. The one and two slot configurations, however, were all completely Stable.

4.6 Conclusions

The first phase of the program therefore closed with the decision that the Vortex Generators, L.E. Slats and Deflector Vanes were unsuitable for the requirement. Attention was therefore concentrated on the use of slotted blades, which appeared to show promise of preventing detachment of flow from the suction wall of the centrifugal compressor channel.

5.0 TESTS ON ROTATING CHANNELS (FIRST SERIES)

5.1 Slotted Blades

The rotor used previously in tests on rotating two-dimensional channels was used, and tests were run with various slot arrangements in the two blades enclosing the middle one of the group of five neighbouring channels of a hypothetical 21 channel impeller with 20° divergence per channel, or of a 27 channel impeller with 15° divergence per channel. The model was mounted on the Low Speed Centrifugal Compressor Rig, and spun at a standard speed of 50 RPM for all these tests, with open inlet throttle. Hot wire anemometer readings were taken over a grid of 21 points in the exit plane of the impeller channel, and movies of smoke flow taken with a 16mm gun-camera rotating with the channels, and viewing them along the axis of rotation.

The set-up is shown in Fig. 7, and the blade slot arrangements tested are shown in Figs. 8 and 9. Velocity profiles at the channel exit plane are shown in Figs. 10-17.

5.2 Discussion of Experiments and Results

On looking at Figs. 10, 11 and 12, which show the effect of slotted walls on the flow in the 20° diverging channel, the first point to be noted is that by comparison with the unslotted configuration (dotted line velocity profile) the same RPM and inlet flow area would appear to produce a larger volume-flow. This suggests that the slots are indeed reducing the blockage of the channel caused by eddies.

Further, it seems that if only one pair of slots is open, particularly the upstream (A) slots, the concentration of flow on the pressure side of the channel exit is increased. The flow entering through the slots seems to be leaving the suction side of the channel and flowing straight across to pile up on the pressure side. However, both the increase of flow and burble plots appear to show that the extremely chaotic flow in the 20° divergent channel has been organized to some extent by the slots.

The same slight increase of flow and pile-up on the pressure wall appear when slot "B" is opened, alone or together with slot "A".

At this point it was considered that the 20° diverging channel was perhaps too severe a case, and attention was transferred to the 15° diverging channel. After establishing the basic characteristic profile of the simple channel, slots A, B, and C were all opened on both walls. For the first time, this showed a definite improvement in exit profile. There was a definite tendency to move more flow to the suction side of the channel, reducing the flow on the pressure side slightly. The total flow appeared very slightly increased.

Slot C alone was not powerful enough to cause much modification to the flow.

Finally, a second modification to the downstream slot, "C_2", in conjunction with slots "A" and "B", produced the greatest flattening of the exit velocity profile seen to that date. (Fig. 17)

5.3 Conclusions

It was concluded that the use of slots in the blades was capable of flattening the exit profile to some extent. This effect appeared to involve an appreciable transfer of fluid from one channel to the next, via the slots. It was therefore decided that further tests should be made on a complete 360° assembly of channels, instead of a rotor carrying only an isolated group of five channels.

From the profiles presented, and from studying movies of smoke-visualized flow, it appeared that the C_2 slot was probably the most effective of those tested, so it was also concluded that the next experiments should concentrate on developments of this, probably stretched to its logical conclusion as an independent bladelet.

6.0 TESTS ON ROTATING CHANNELS (SECOND SERIES)

6.1 Intermediate Short Blades

The rotor was rebuilt to accept an almost complete ring of blades, (23 effective channels spaced as for 24). This meant that the inlet conditions would be slightly less idealized, since a 90° cascaded bend could no longer be used to turn the inlet flow from vertical to horizontal at the test channel entry. However, the uniformity of neighbouring channels was so important, particularly in experiments with slotted blades, where flow is transferred from one channel to the next, that a complete rotor was considered essential.

Movies of smoke flow in the rotating channels and in the bladeless diffuser annulus were shot by a gun camera rotating with the channels, as before.

The same 21 point grid of hot wire anemometers at the channel exit plane was again used, but it could also be replaced by a 30 point grid 4½" radially outwards, extending its extra 9 points round the circumference in a trailing direction. This grid picked up the jet of flow issuing from the channel on test, at the position of the leading edges of hypothetical diffuser vanes, and the extra 9 points allowed measurement of the jet as it was swept back relative to the rotating channels. Measurements were made on the two grids on separate runs, so that the two sets of hot wires were never both installed at the same time, thus eliminating aerodynamic interference between them.

The channels used in this series of experiments were two-dimensional, and had an 18° angle of divergence within each channel, with 23 channels flowing freely, and the 24th channel blocked by a structural member. Each experimental modification was applied to every blade on the rotor. The arrangement of the rotor is shown in Fig. 18.

The experiments in this phase followed from the conclusions of the previous phase, in which the most effective slot arrangement was shown to involve a slot near the blade tip, with the tip portion of the blade moved bodily sideways. The present phase in effect left the blade intact, and reproduced the tip part as an extra short-chord intermediate blade within the channel.

6.2 Discussion of Experiments and Results

The series of configurations tested is shown in Fig. 19. The channel was first run empty as a datum; for the second experiment the simplest intermediate blade, a flat sheet on the channel centerline, was inserted.

The exit velocity profiles, at rotor tip diameter and at the hypothetical diffuser vane leading edge diameter (planes 1 and 2 respectively), were practically unaffected by this simple intermediate blade. As Figs. 22 and 23 show, the profile was heavily peaked near the pressure wall of the channel. The plane 2 traverse shows a second peak of the back swept jet from the preceeding channel in both cases.

In the third and fourth experiments, this flat intermediate short blade was offset successively $\frac{3}{4}$" and 1 1/8" at its leading edge, with its trailing edge remaining on the channel centerline. As Figs. 24 and 25 show, there resulted an increasing slight shift of the flow towards the suction wall, particularly on the floor and roof of the channel. The outer (No. 2) plane velocity profile showed a definite flattening. The impeller tip plane (No. 1) in Fig. F showed a severe wake from the intermediate blade, suggesting violent stall off its suction surface. This implied that it was already pushed beyond the effective lift coefficient of a flat plate aerofoil.

In the next experiment the flat plate was therefore replaced by a 10% C4 aerofoil with 11° camber, in the same offset position as the flat plate. Fig. 26 shows that there was very little change from the flat plate performance. The severe wake indicated that the C4 aerofoil was also stalled.

Finally, this aerofoil had a slot cut through it at 50% chord, with 21° of additional camber introduced into the aft 50% of the blade. Fig. 27 shows that not only was the No. 1 plane velocity profile improved over the whole height, rather than merely at floor and ceiling, but also that the blade wake was less severe. The No. 2 plane profile shows that by the time the flow reached the stator vane leading edges the profile was much flatter than in any previous configurations.

6.3 Conclusions

A cambered, slotted, short intermediate blade placed in each channel of a centrifugal impeller shows a flatter velocity profile a short distance out from the rotor than any other device tested in this program.

Experiments on isolated slotted blades suggest that its operation should be stable, and recover to the desired mode of operation after a violent temporary disruption of the flow.

The next question to be asked seems to be the price, in terms of total pressure loss, paid for this improvement in velocity profile. This assessment should probably start from a rather simple cascade-tunnel experiment on an isolated slotted blade. Detailed studies on optimum slot-configurations are also needed. Subsequently, the use of slotted main blades on the complete rotor should be investigated, followed by studies on more complex three-dimensional channels.

REFERENCES

1.	Gould, D.G.	Various NAE Reports on the Application of Vortex Generators to the Wings of an Aircraft. (Classified)
2.	Schubauer and Spangenberg	Forced Mixing in Boundary Layers. Journal of Fluid Mechanics, Vol. 8, 1960, pp 10-32.

APPENDIX

Note on the Use of Wool-Tufts for Flow-Visualization

It is generally accepted that the presence of wool-tufts on a surface does not affect the flow in the vicinity. The present writer has never been entirely without misgivings on this score, although previous checks have never shown any influence of the tufts.

However, in the static tests (see section 4) it began to appear that the flow was less stable when tufts were attached. The 90° camber aerofoil was therefore tested with smoke visualization. Without wool-tufts the flow remained attached for about $\frac{3}{4}$ chord back on the convex side.

When wool-tufts were fixed onto the convex surface, using small strips of cellotape to hold the tufts in position, the flow detached at the leading tufts.

When the tufts were removed, leaving the cellotape attachments in position, the flow started and remained attached.

The tufts were replaced, and the flow again detached. In this state, the flow could be reattached by "pushing" it back onto the aerofoil with the hand, and would sometimes stay attached. However, the slightest disturbance caused it to detach again.

Since in this particular case it seemed clear that the presence of tufts was having a perceptible effect on the flow stability their use was discontinued in these experiments.

Tufts are in any case not looked upon favourably for tests on rotating channels, since centrifugal force tends to stabilize the tufts in a radial direction, irrespective of local airflow.

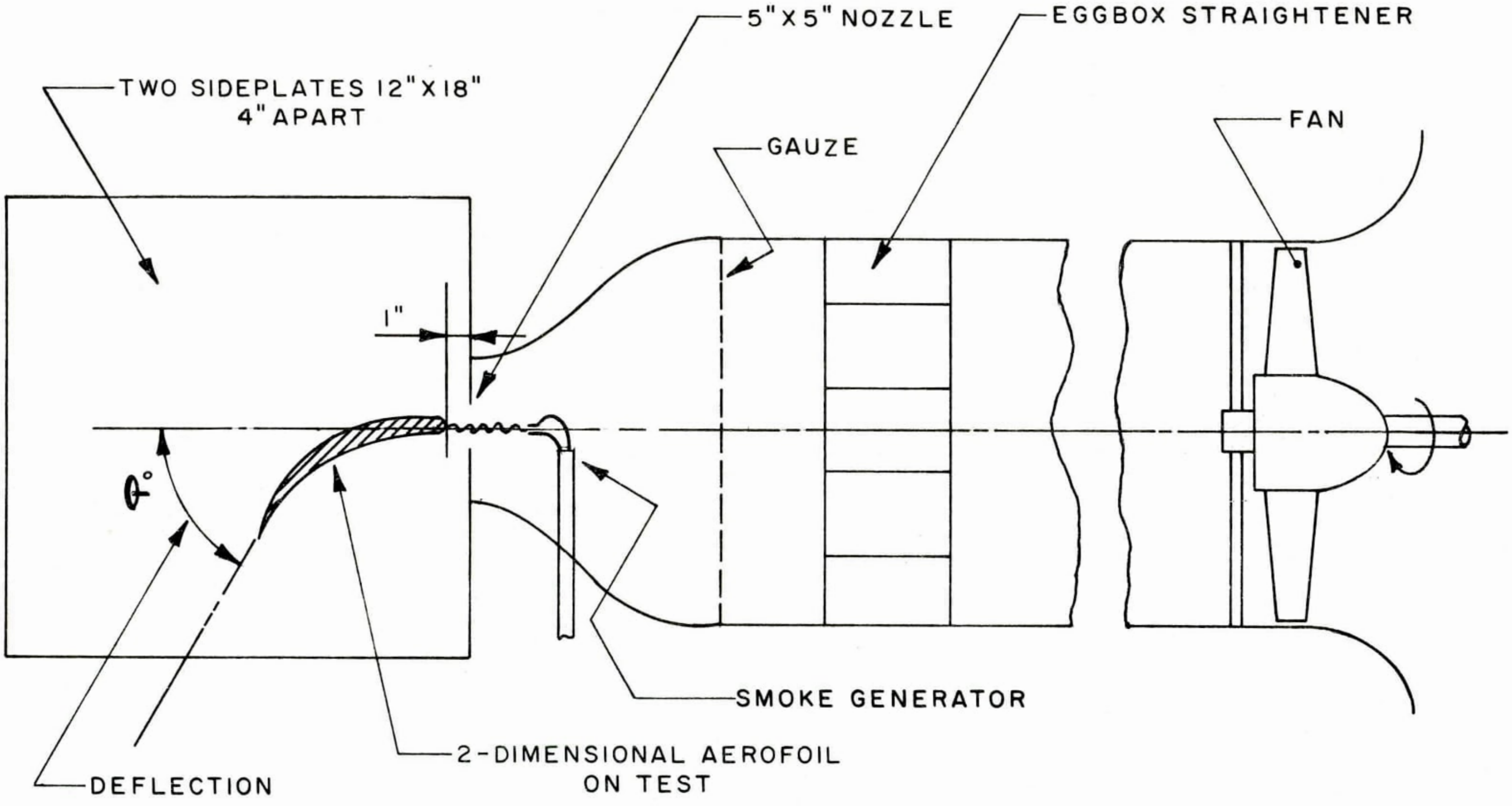

STATIC EXPERIMENTS; TWO DIMENSIONAL OPEN JET TUNNEL

FIG. 1

A. UNMODIFIED AEROFOIL

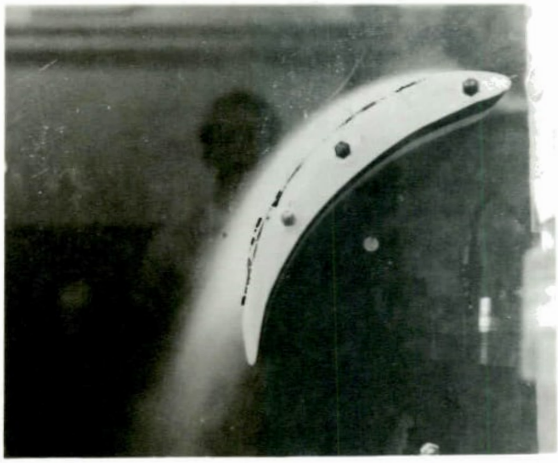

B. SAME AEROFOIL WITH TWO SLOTS

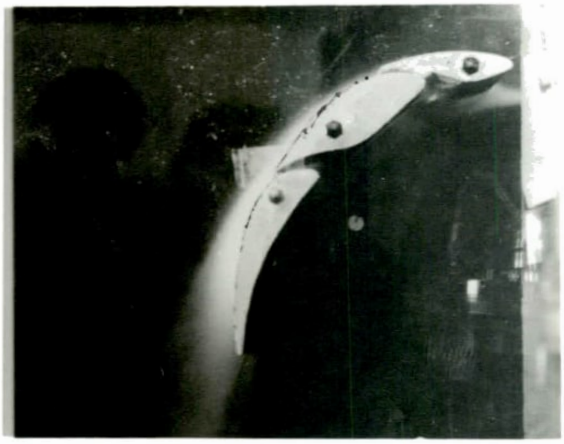

C. SAME AEROFOIL, WITH ROW OF "TRIANGULAR PLOW" VORTEX GENERATORS (FLOW COMPLETELY DETACHED)

STATIC TESTS — SMOKE VISUALISATION OF FLOW
(90° CAMBERED AEROFOIL)

FIG. 2

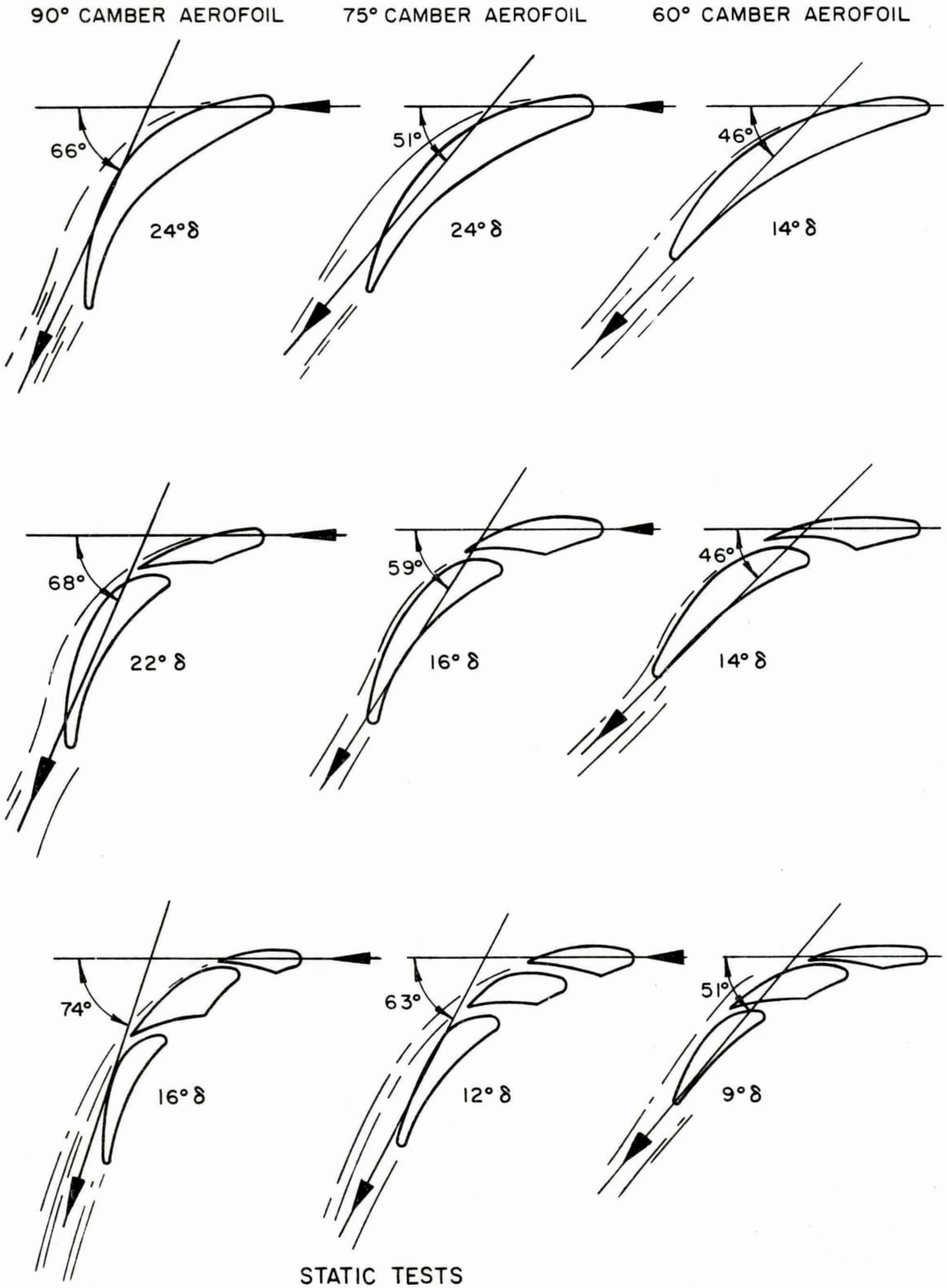

STATIC TESTS
VARIOUS SLOTTED BLADES

Fig.3

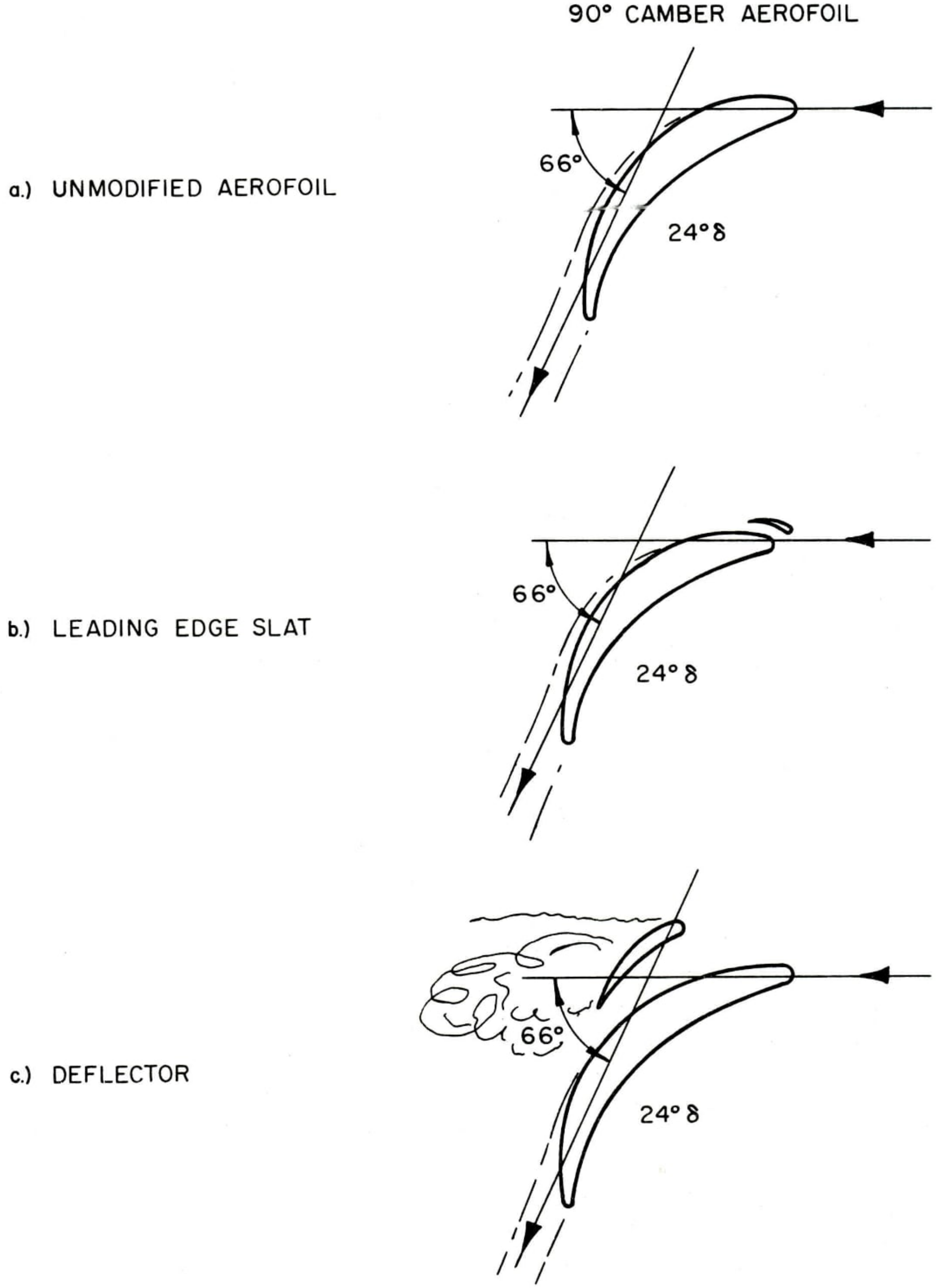

STATIC TESTS
SLAT AND DEFLECTOR

Fig. 4

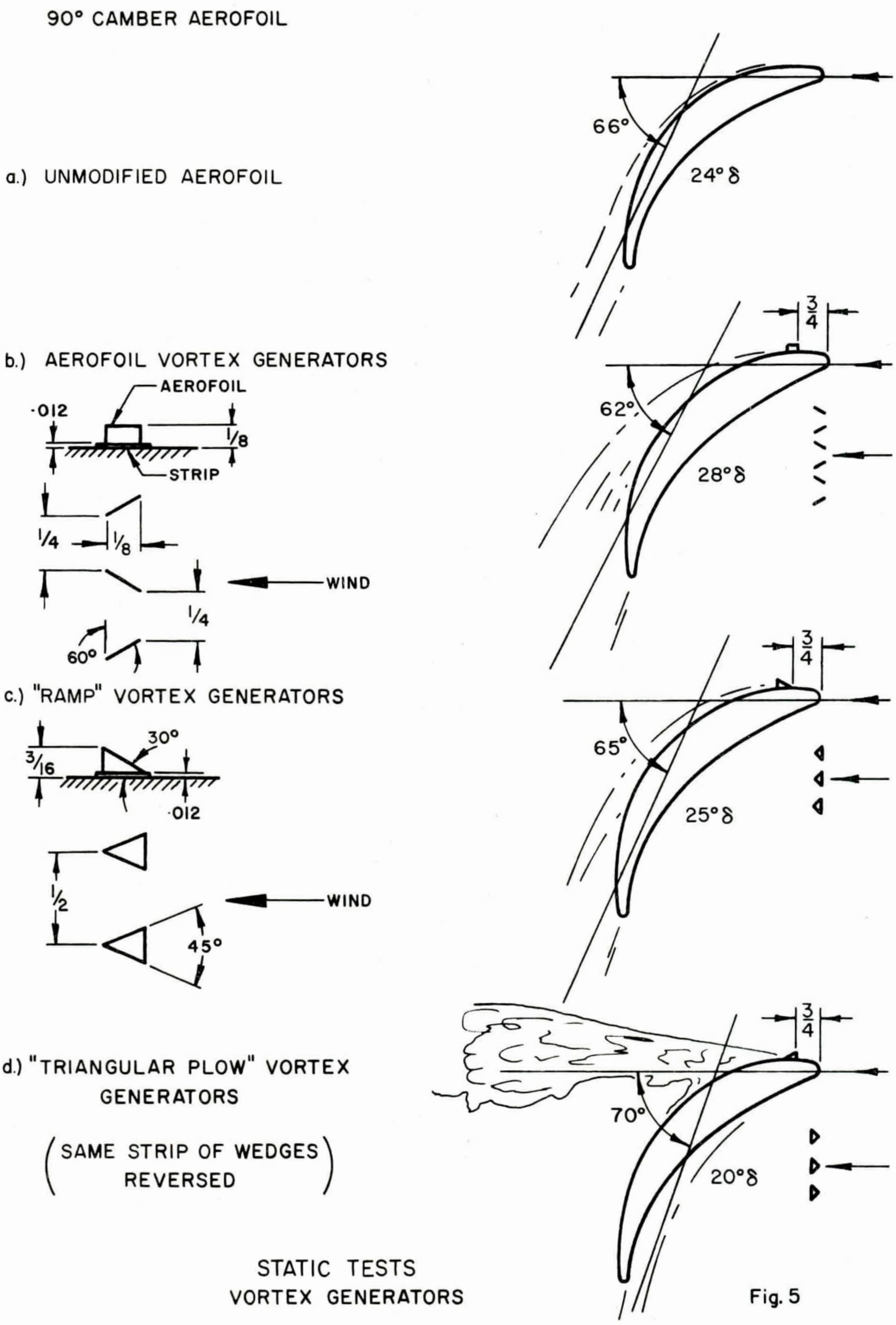

STATIC TESTS
VORTEX GENERATORS

Fig. 5

SIMPLE STABILITY CRITERION

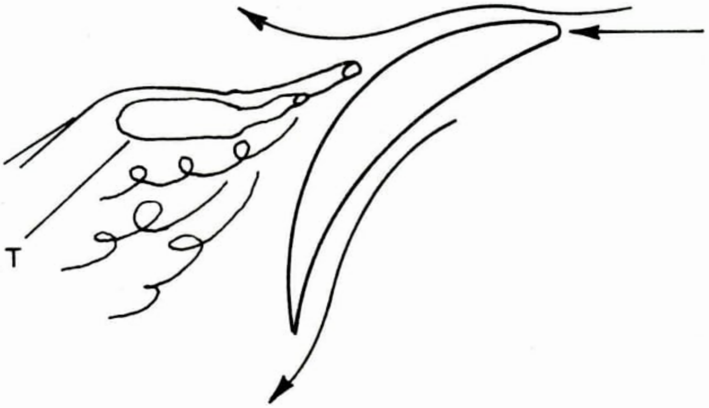

(a) FORCIBLE DETACHMENT OF FLOW

(SPONTANEOUS REATTACHMENT INDICATES STABLE FLOW)

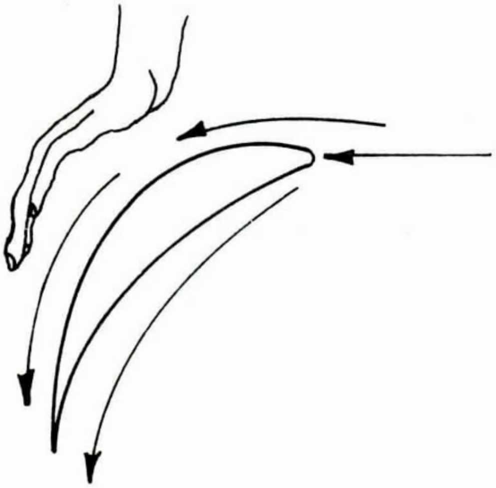

(b) FORCIBLE REATTACHMENT OF FLOW

(SPONTANEOUS DETACHMENT INDICATES AN UNSTABLE FLOW)

STATIC TESTS STABILITY CRITERION

FIG. 6

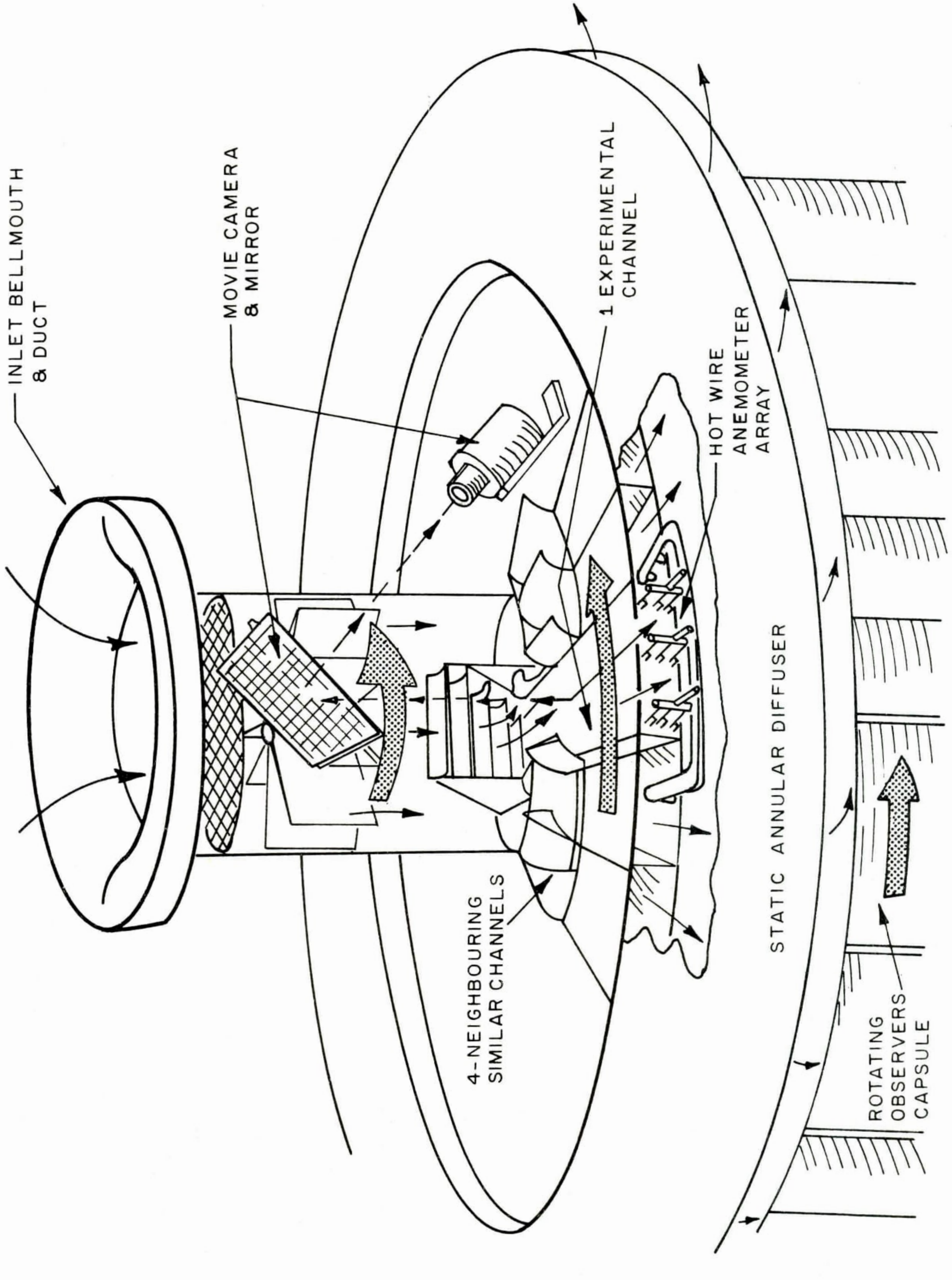

FIVE-CHANNEL ROTATING EXPERIMENTAL SET-UP

FIG. 7

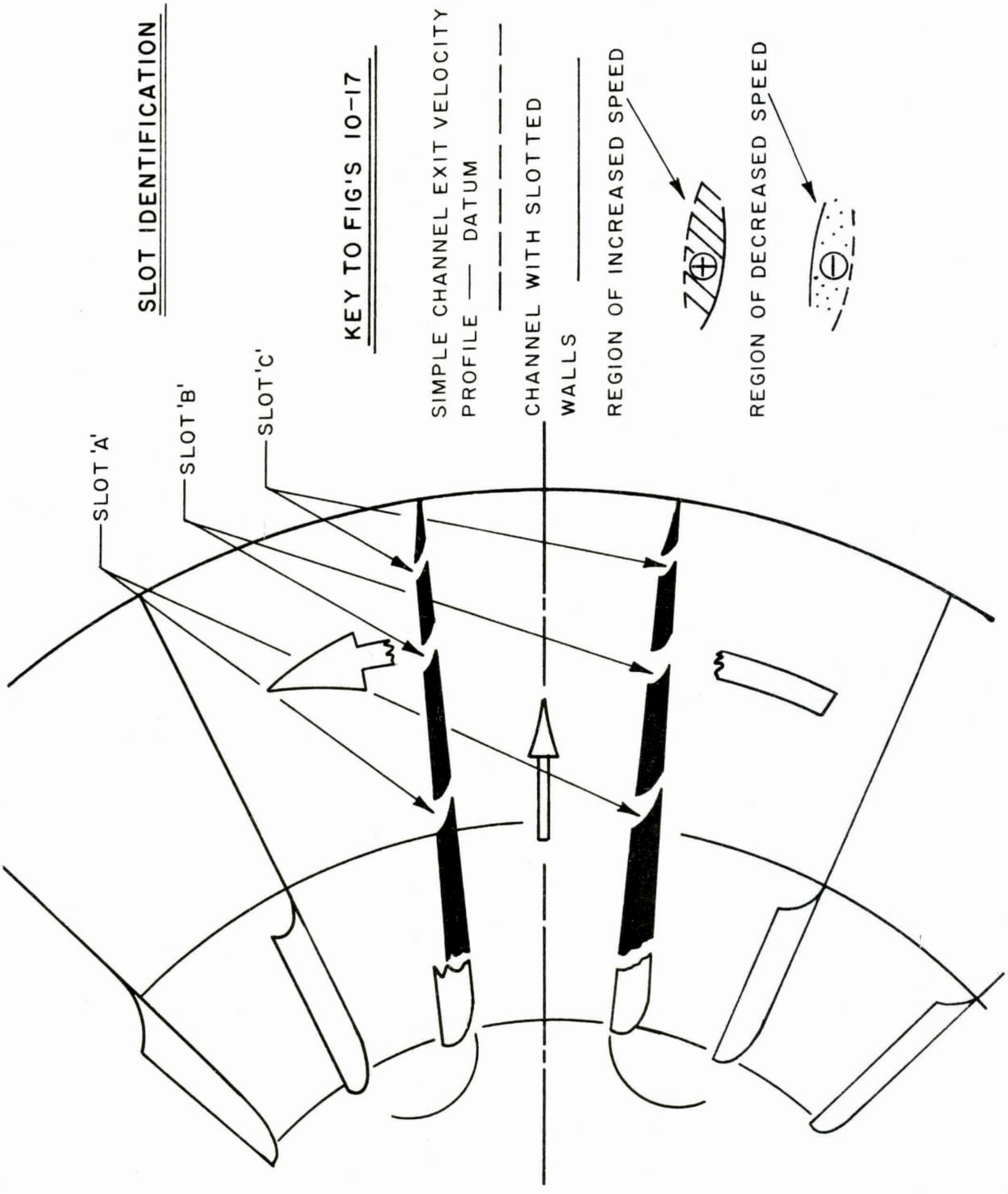

(KEY TO FIG'S 10-17)

ROTATING TESTS
SLOTTED BLADES

FIG. 8

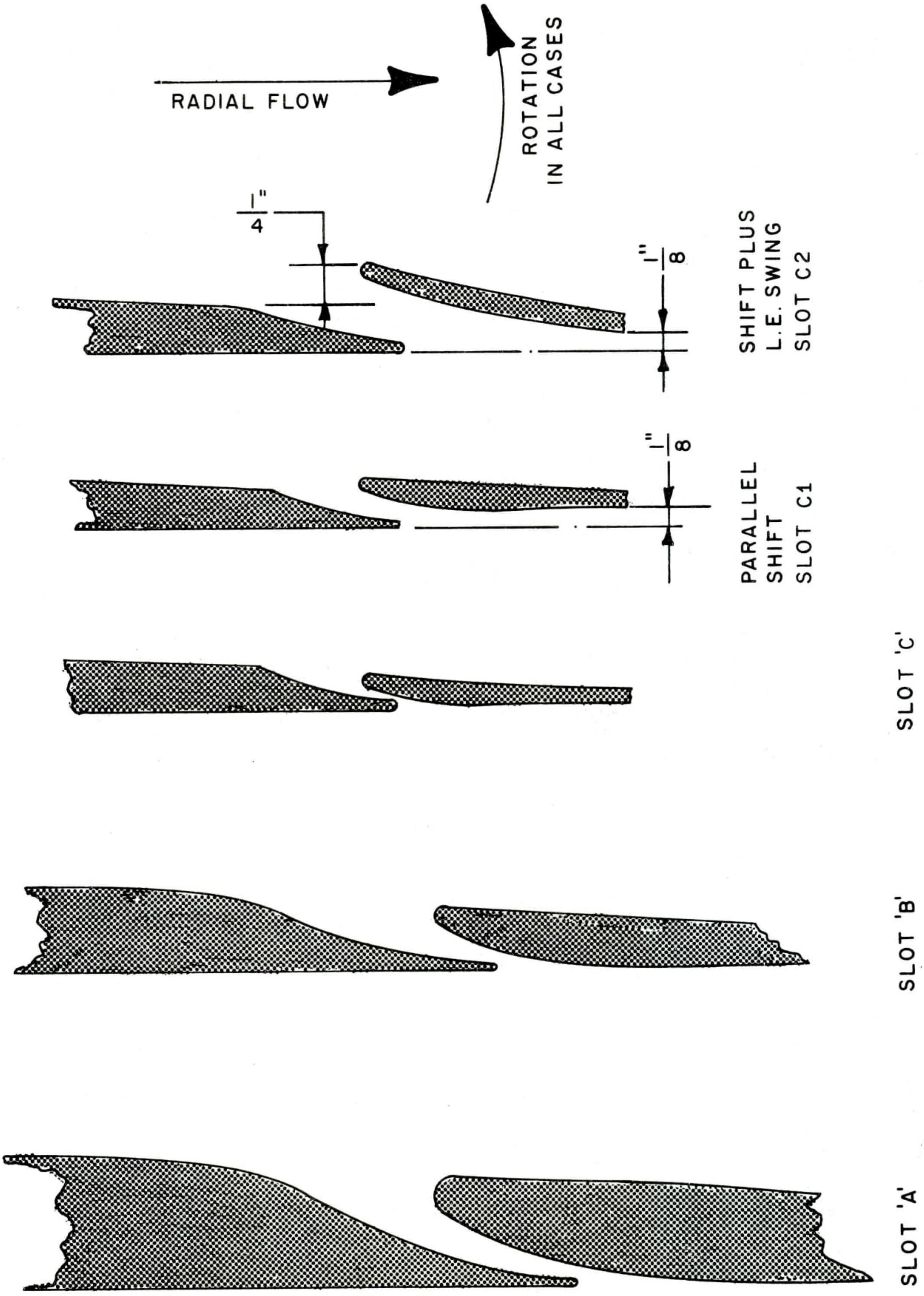

DETAILS OF SLOTS TESTED

FIG.9

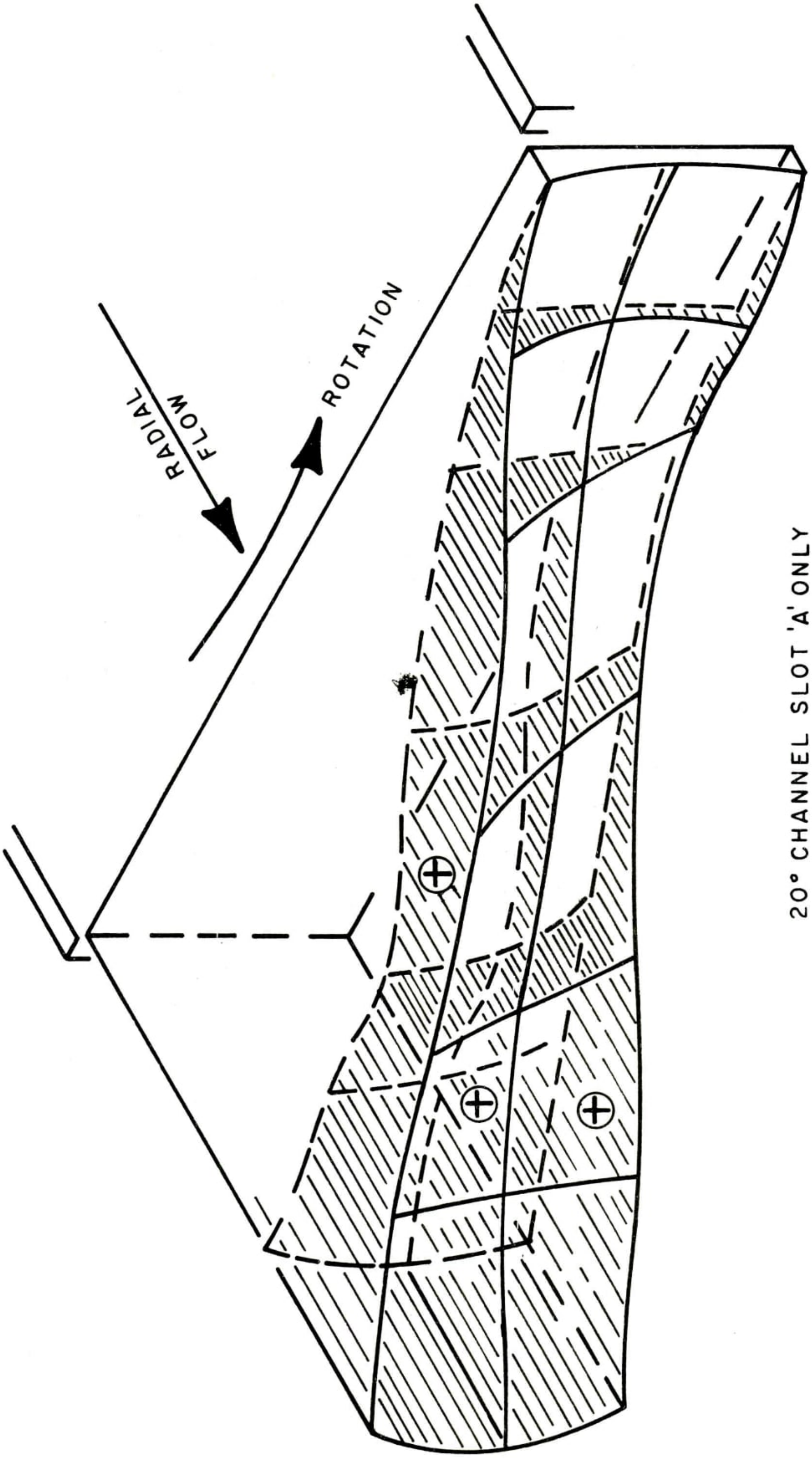

20° CHANNEL SLOT 'A' ONLY

FIG. 10

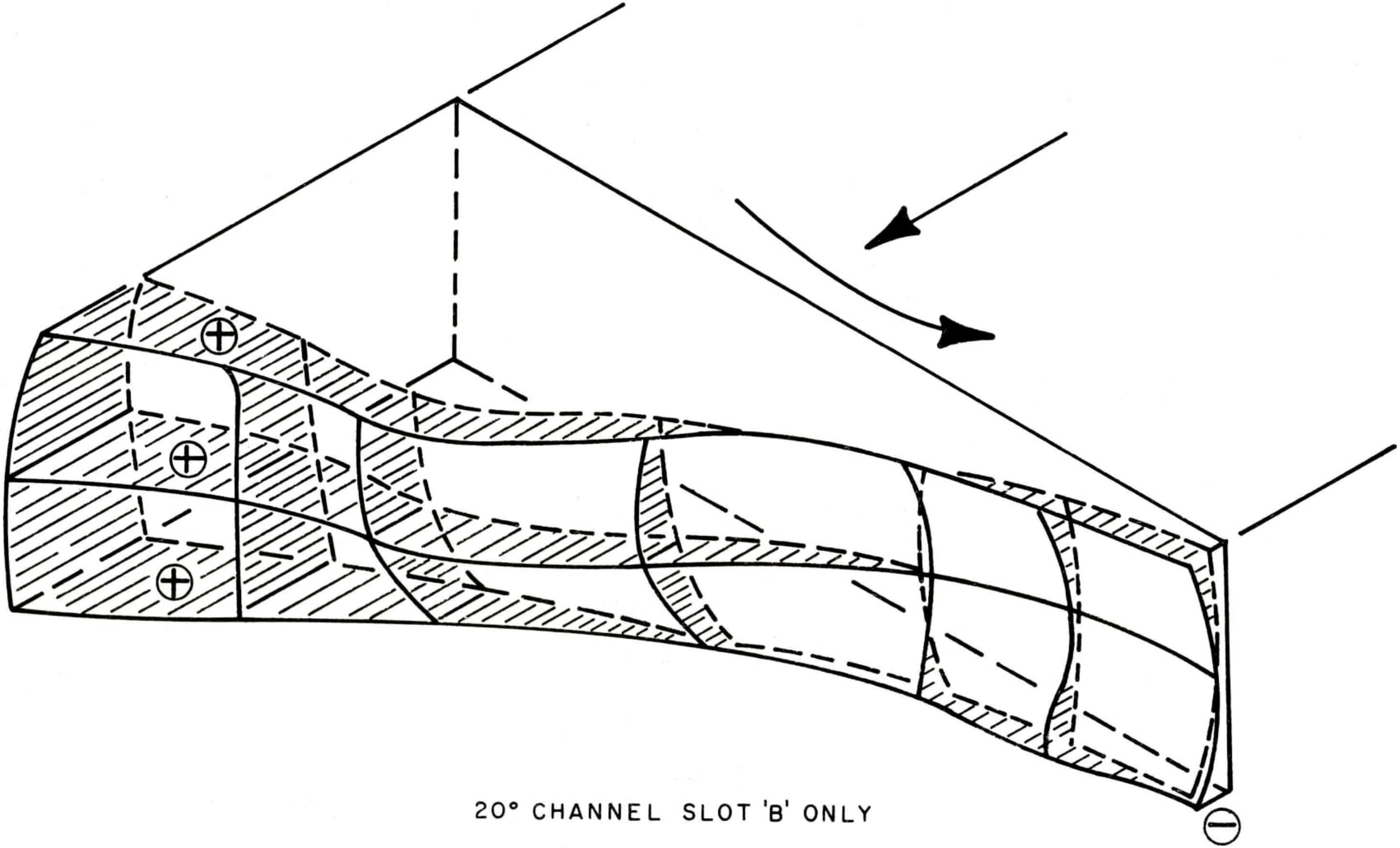

20° CHANNEL SLOT 'B' ONLY

FIG. 11

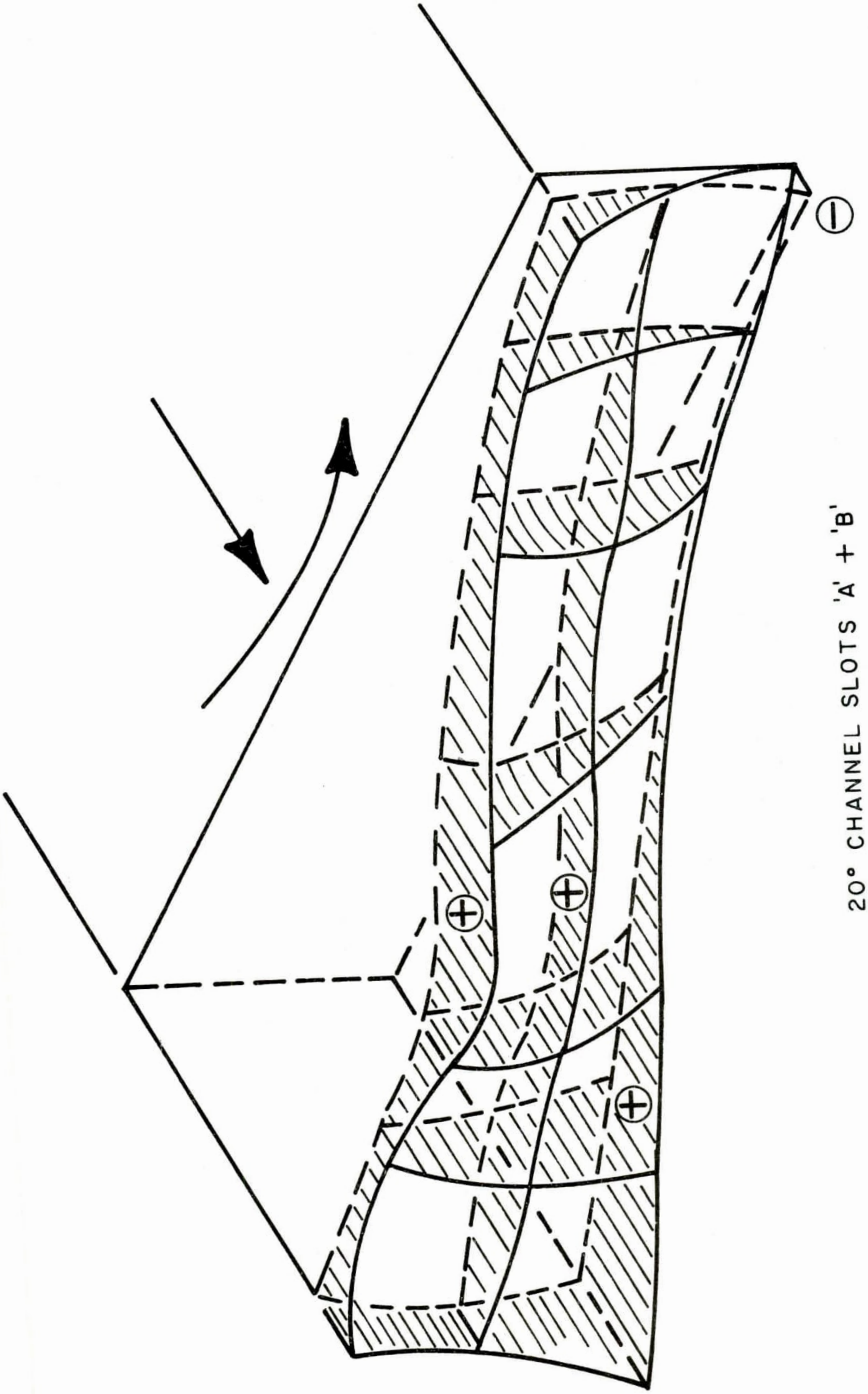

20° CHANNEL SLOTS 'A' + 'B'

FIG. 12

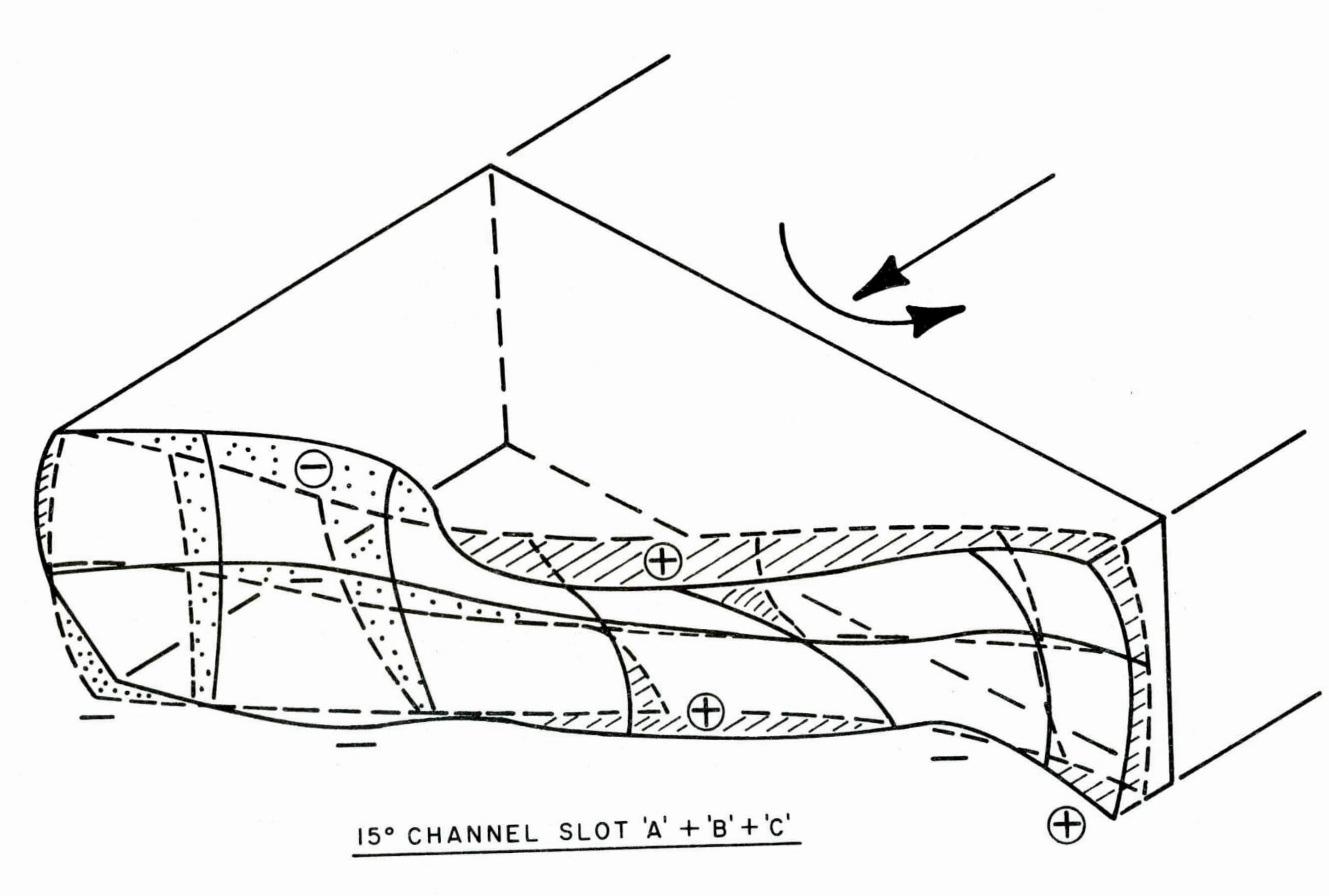

15° CHANNEL SLOT 'A' + 'B' + 'C'

FIG. 13

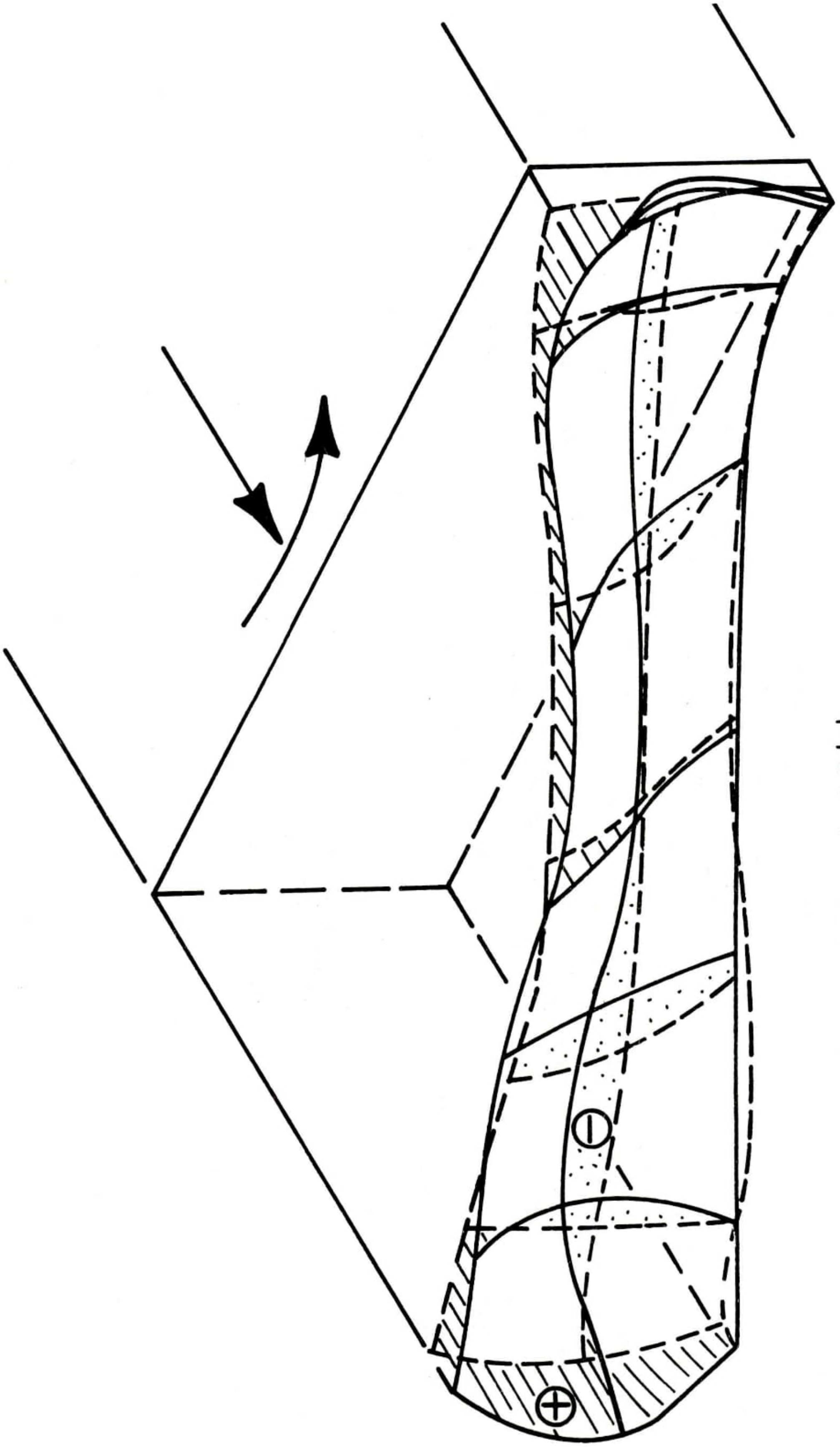

15° CHANNEL SLOT 'C' ONLY

FIG. 14

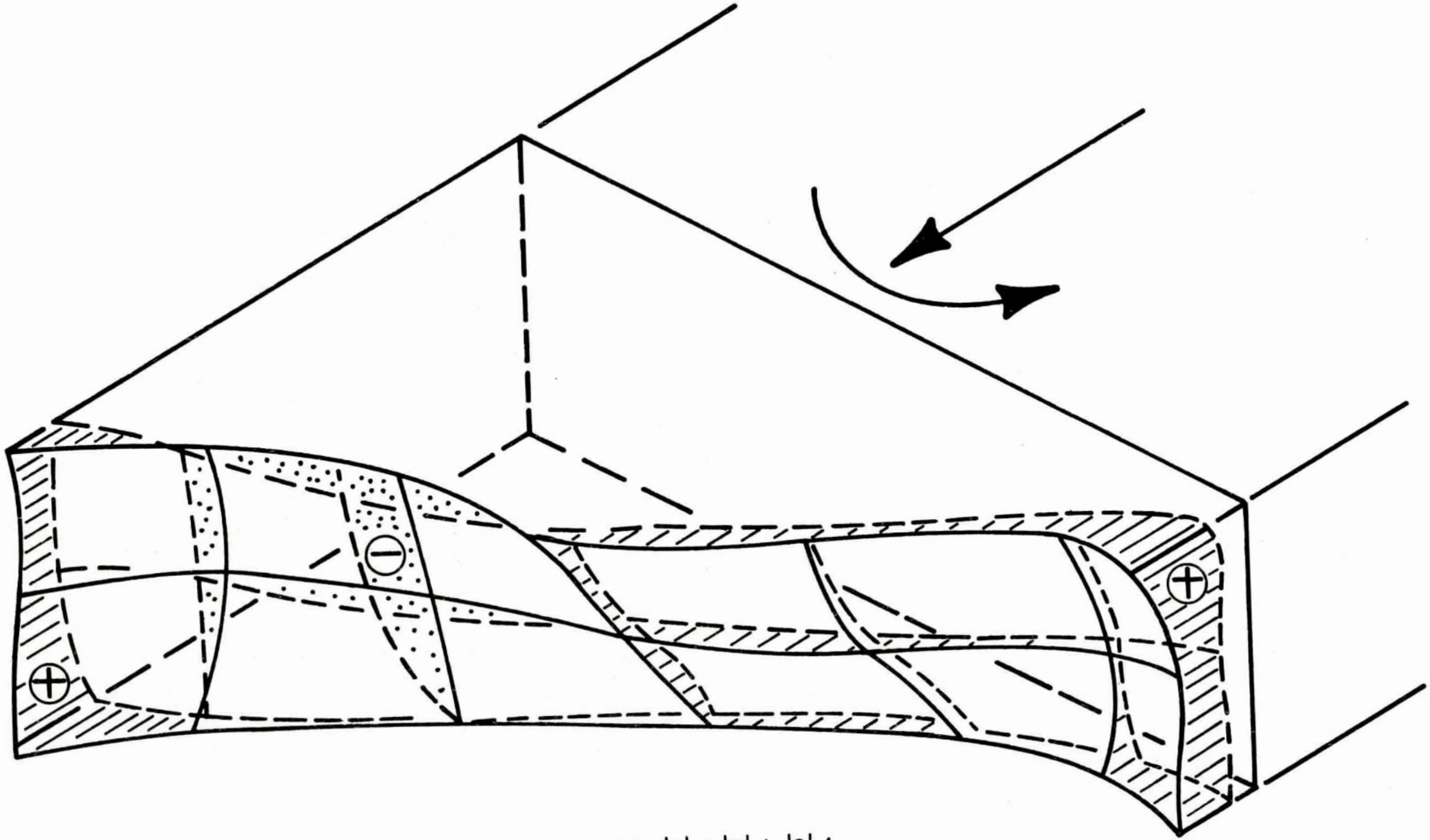

15° CHANNEL SLOTS 'A' + 'B' + 'C' 1

FIG.15

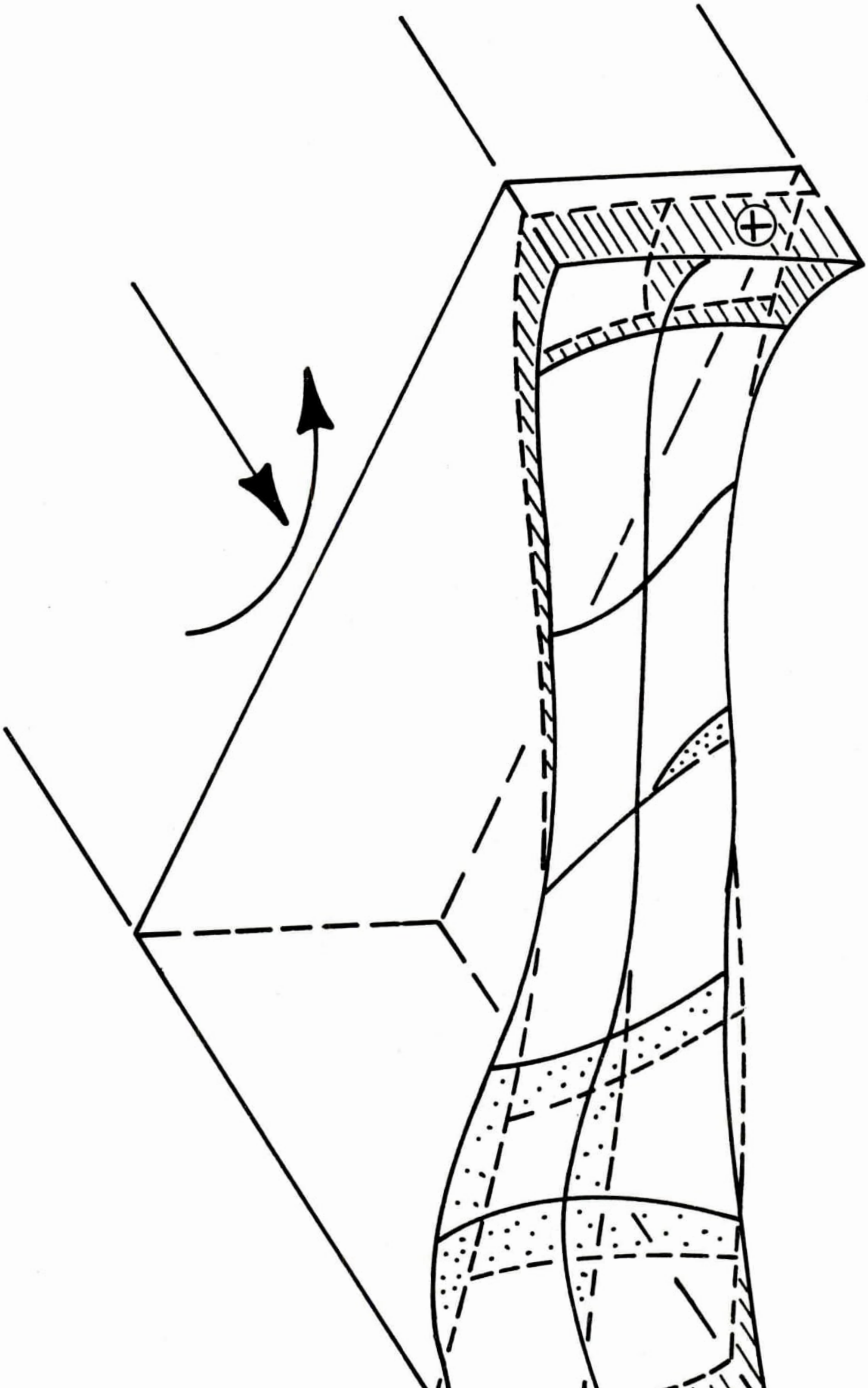

15° CHANNEL SLOT C_2

FIG. 16

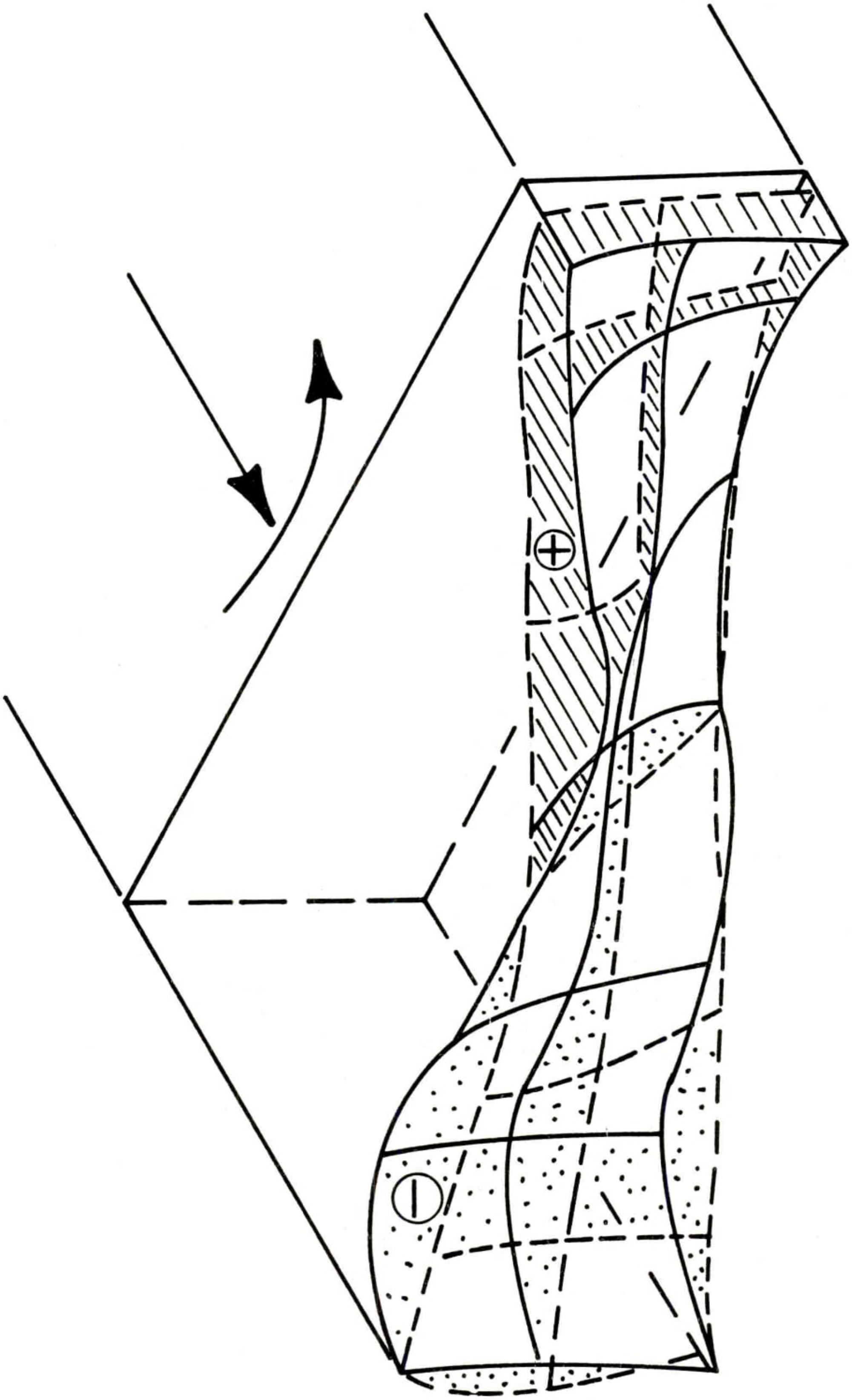

15° CHANNEL SLOTS A + B + C_2

FIG.17

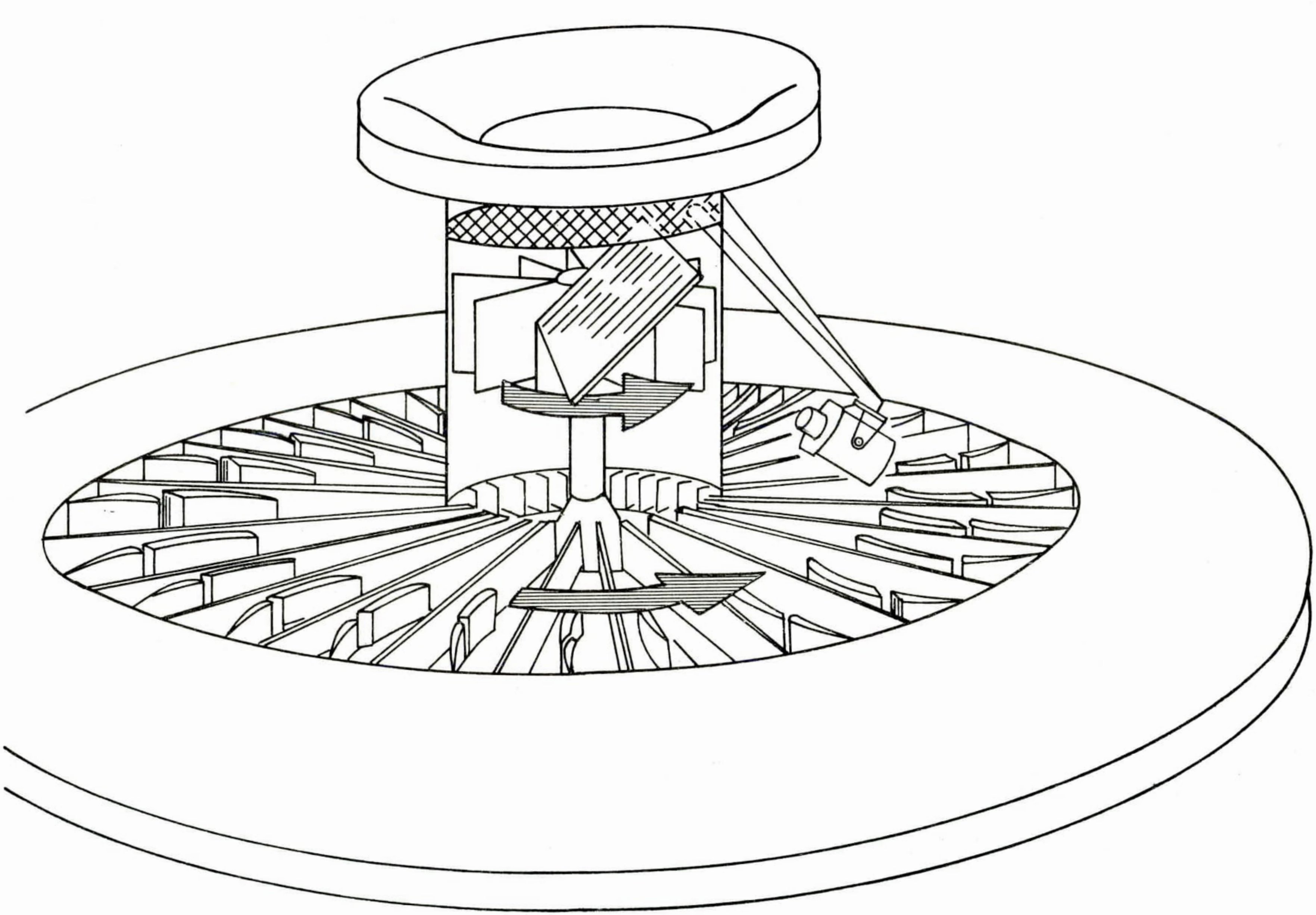

23/24 CHANNEL ROTATING RIG
WITH AEROFOIL SUB BLADE No. 2
IN POSITION

FIG. 18

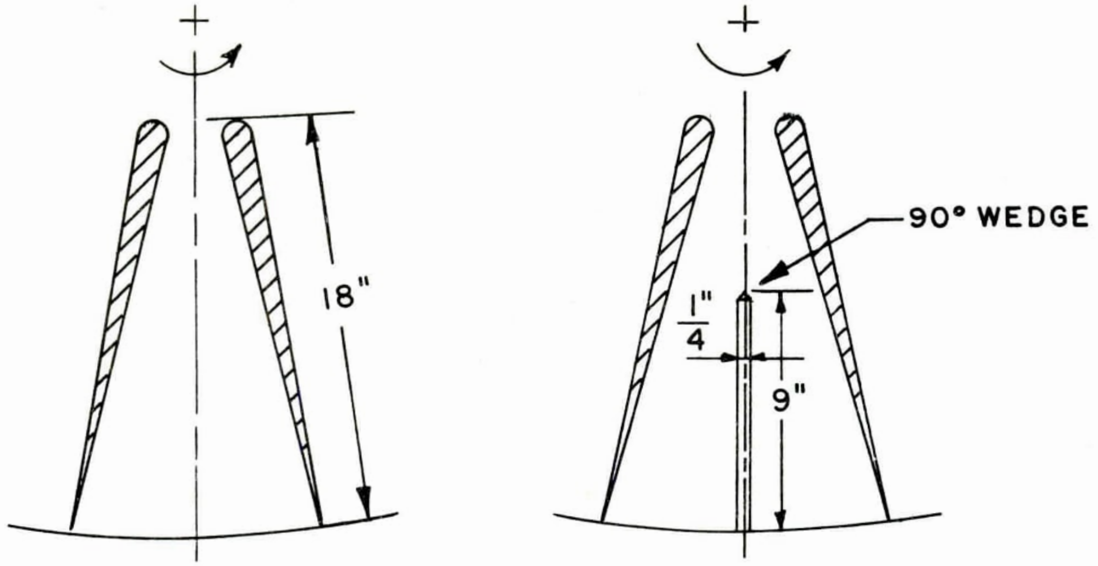

DATUM RUN 'A' FLAT SPLITTER RUN 'B'

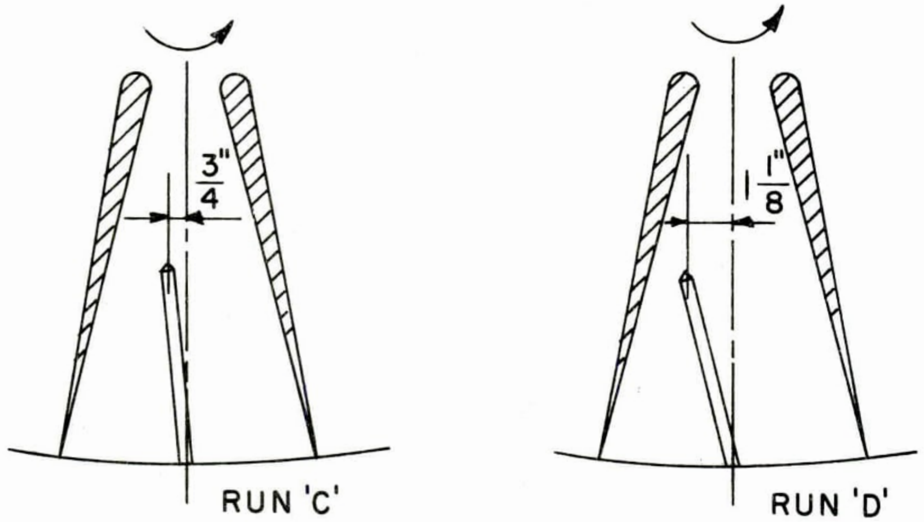

RUN 'C' RUN 'D'

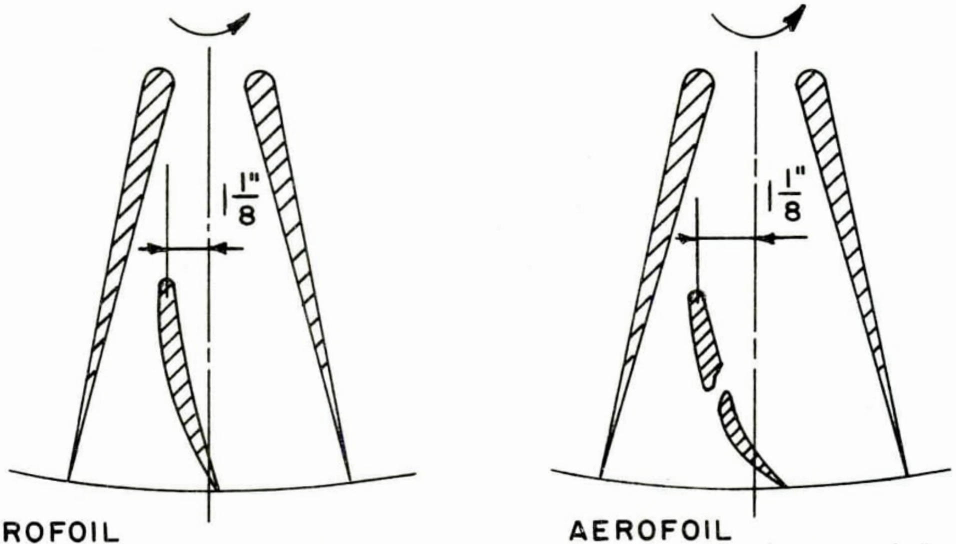

AEROFOIL
SUB BLADE 1 RUN 'E'

AEROFOIL
SUB BLADE 2 RUN 'F'

24 CHANNEL EXPERIMENTS. DETAILS OF CHANNELS

FIG. 19

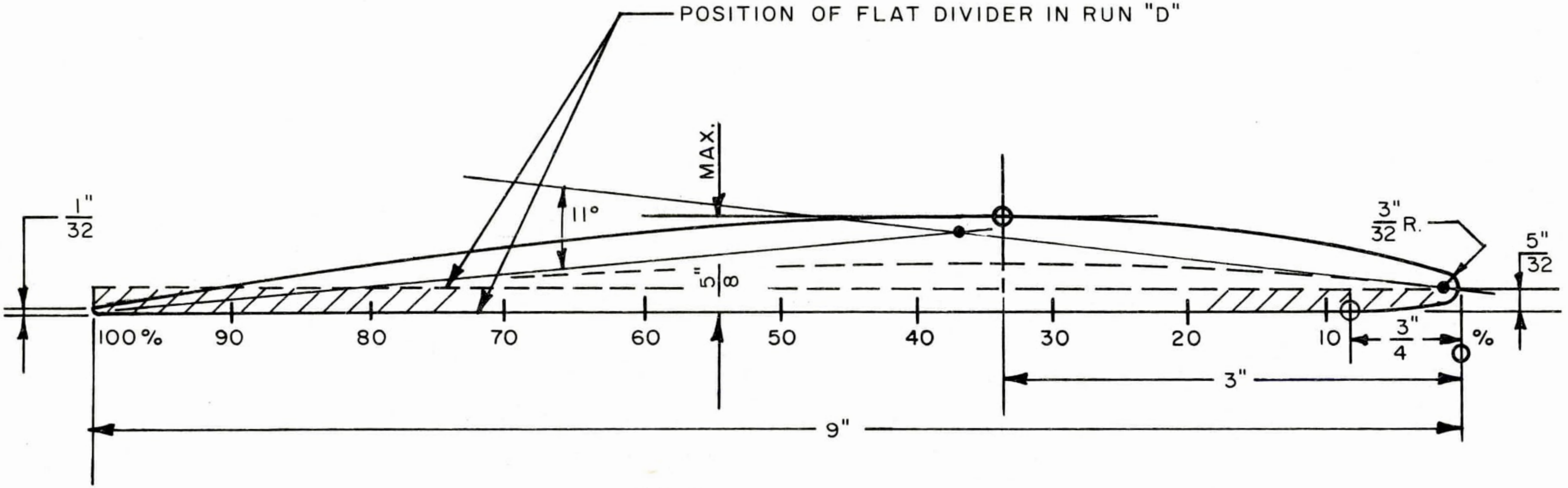

AEROFOIL SUB BLADE 1

APPROX. C-4, 7% t/c, SECTION
11° CAMBER

FIG. 20

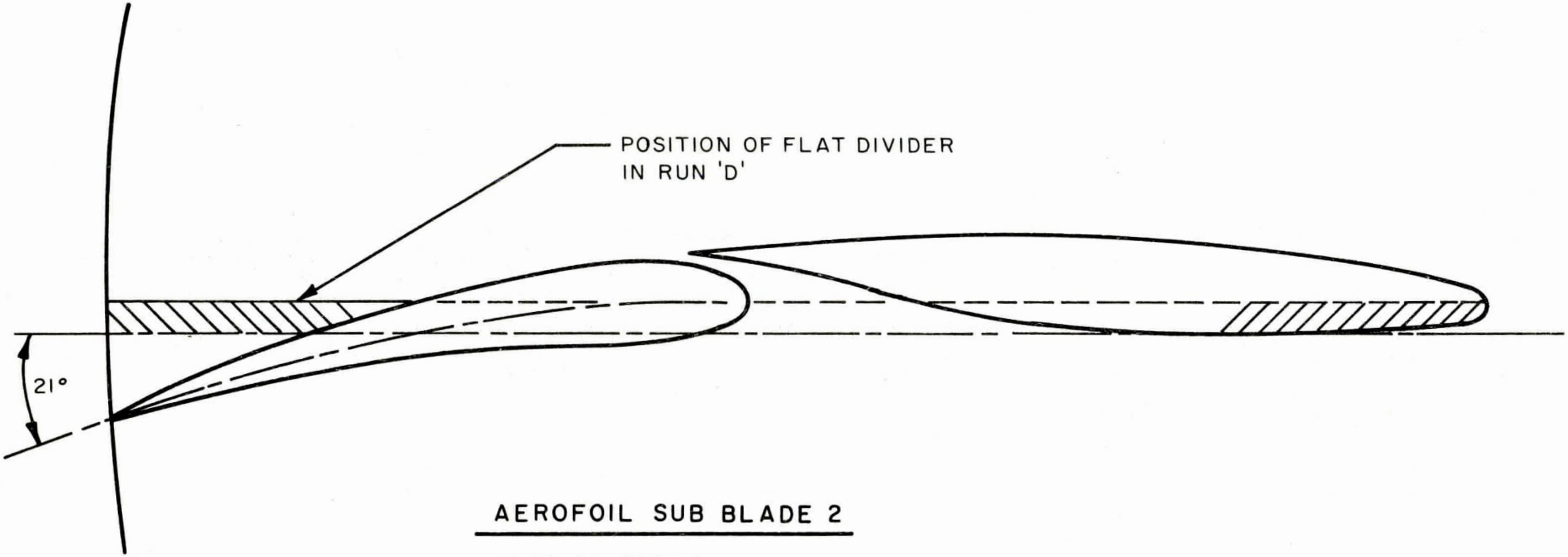

AEROFOIL SUB BLADE 2

SLOT AT 50% C

ADDED 21° CAMBER ON AFT PART,

PLUS 11° OF CAMBER ON BASIC

SUB BLADE 1

FIG. 21

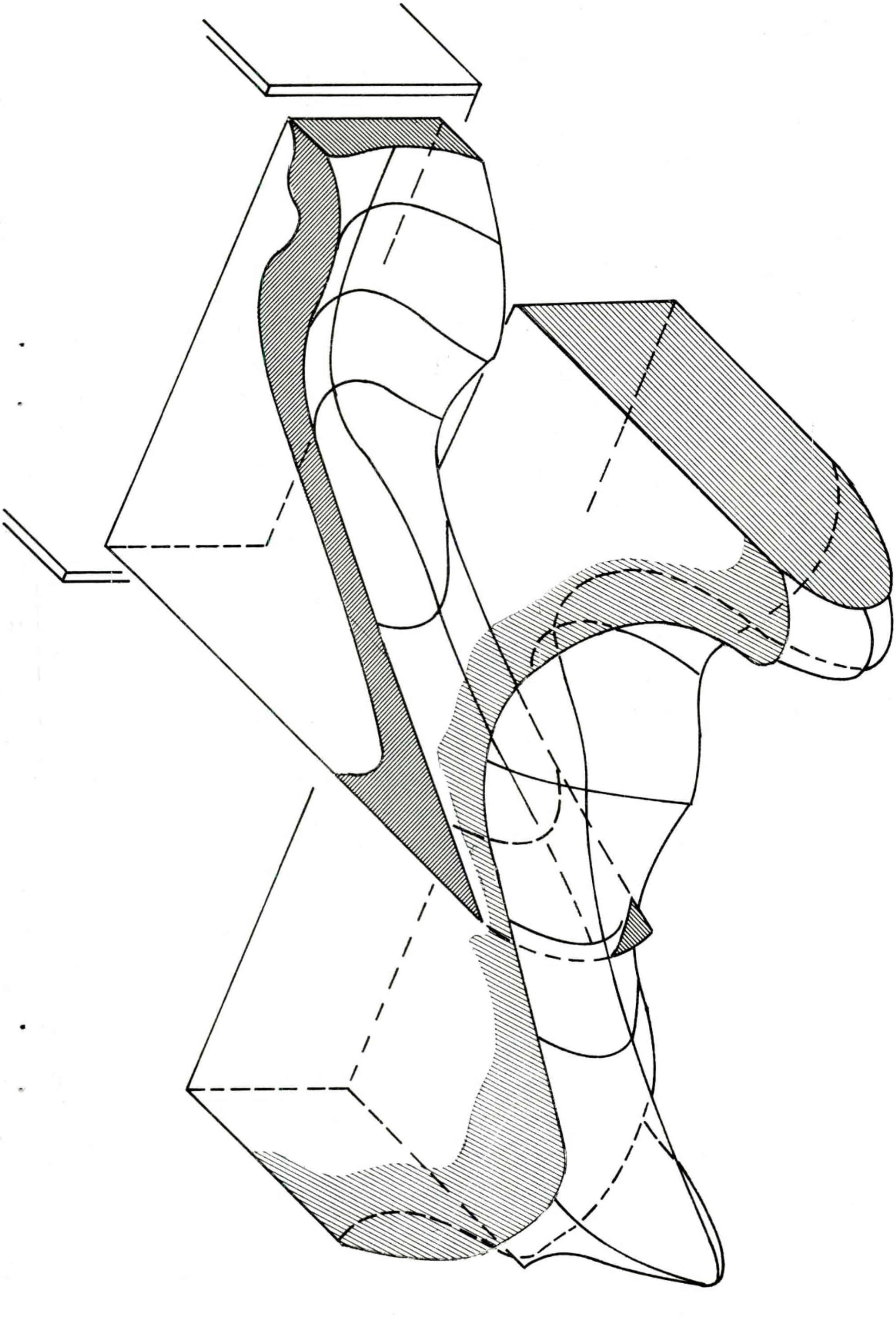

RUN 'A' — DATUM

EMPTY PASSAGE

FIG. 22

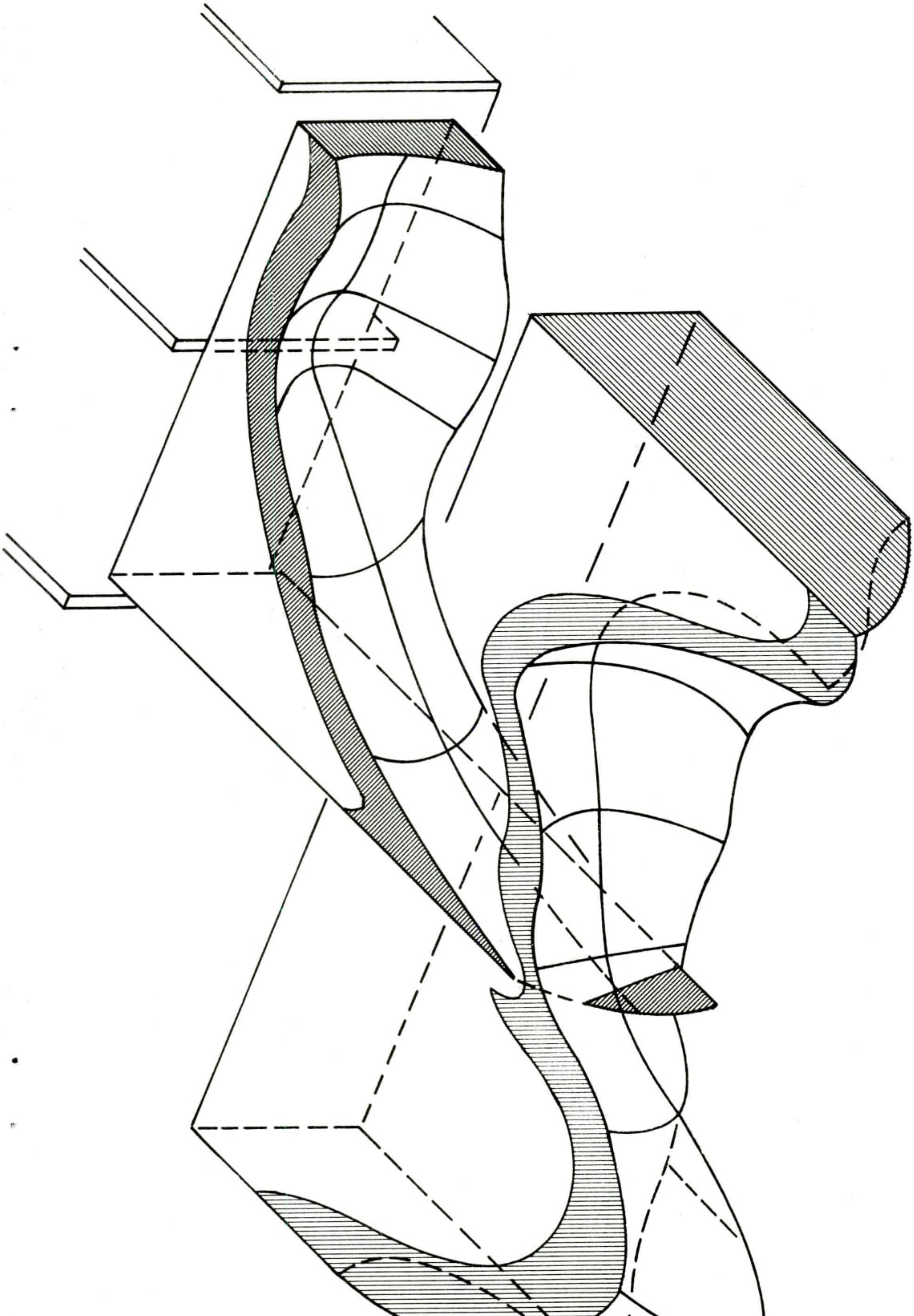

RUN 'B' — FLAT ℄ SPLITTER

FIG. 23

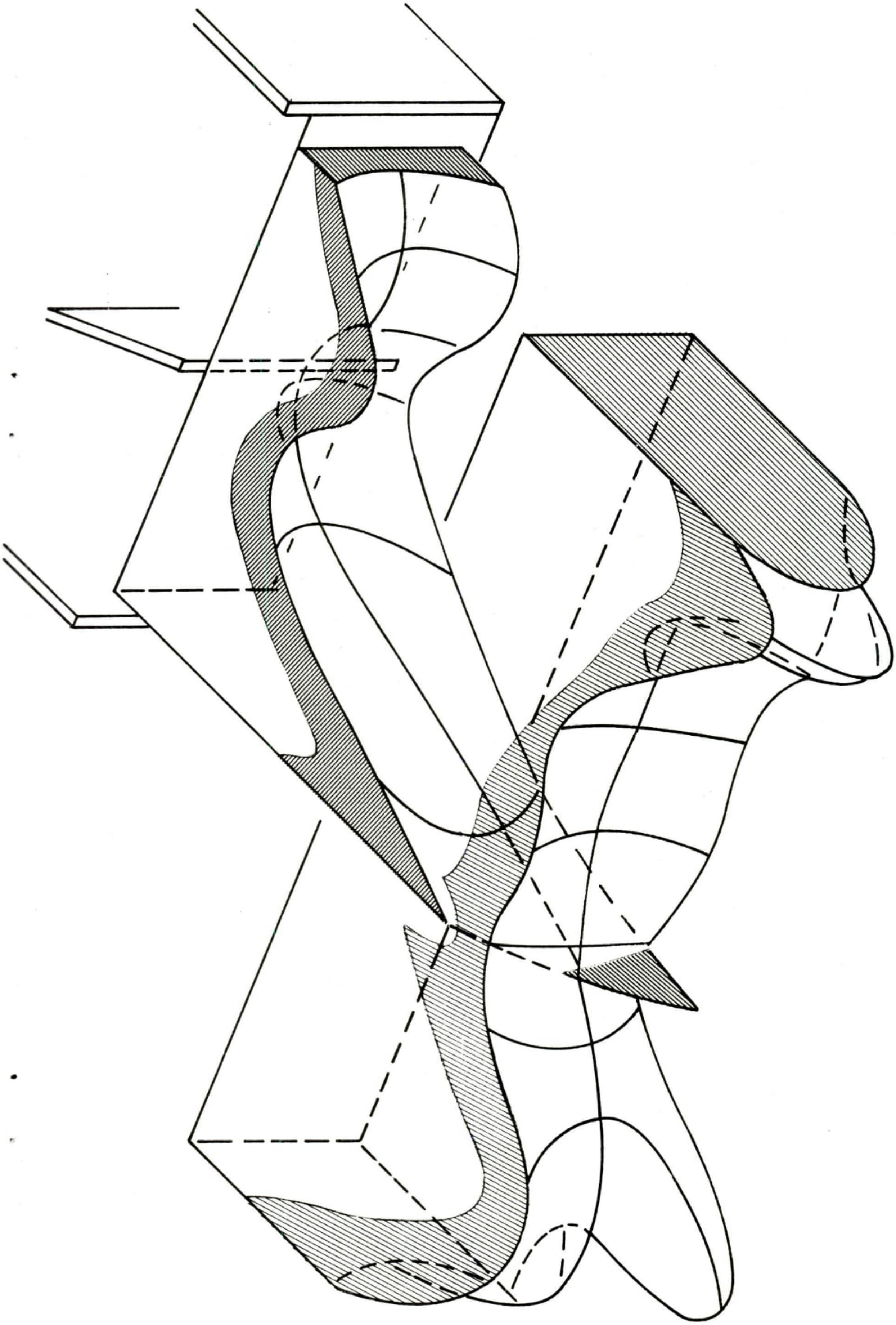

RUN 'C' FLAT ANGLED 3/4" SPLITTER

FIG. 24

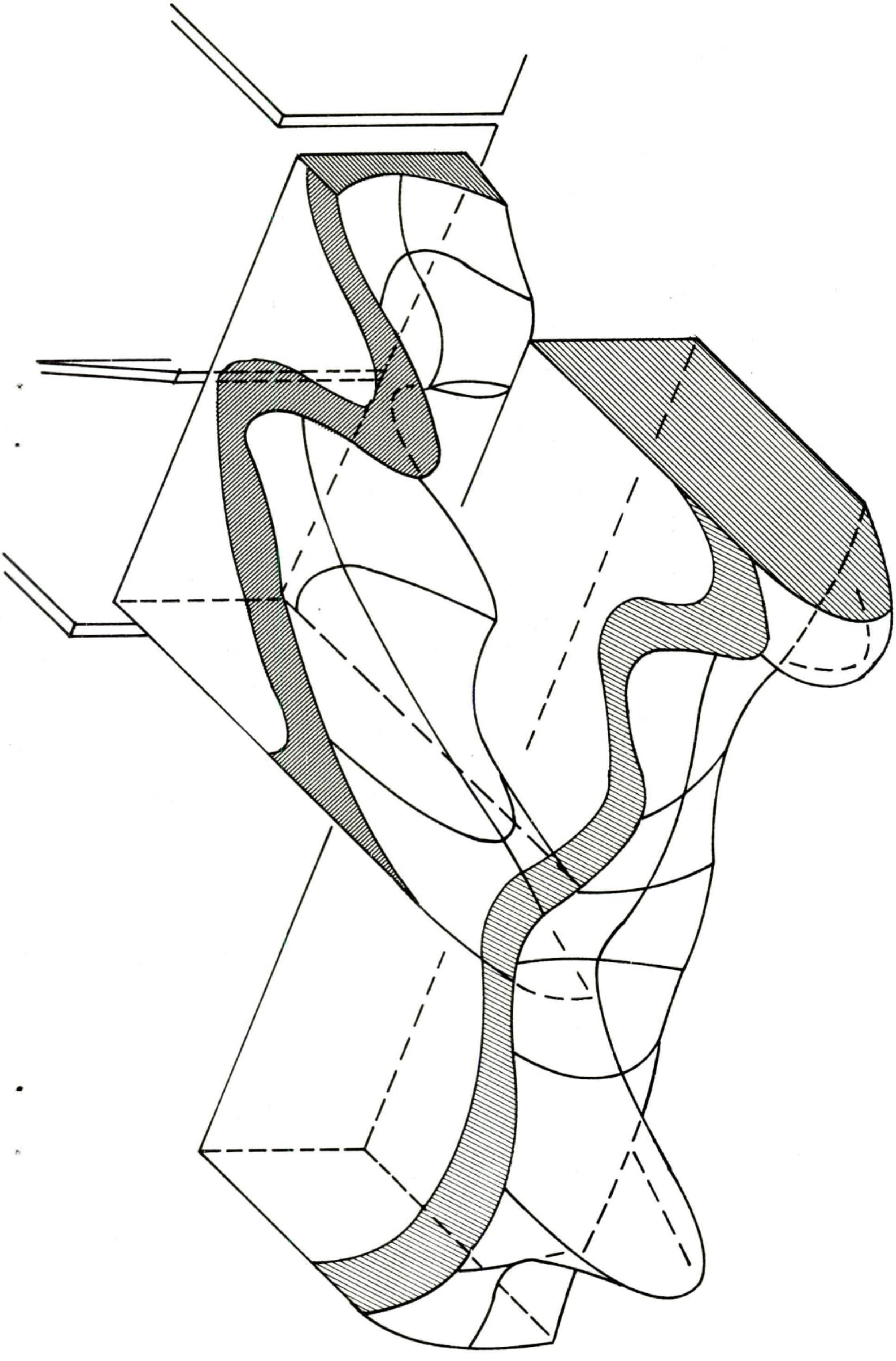

RUN 'D' FLAT ANGLED $1\frac{1}{8}''$ SPLITTER

FIG. 25

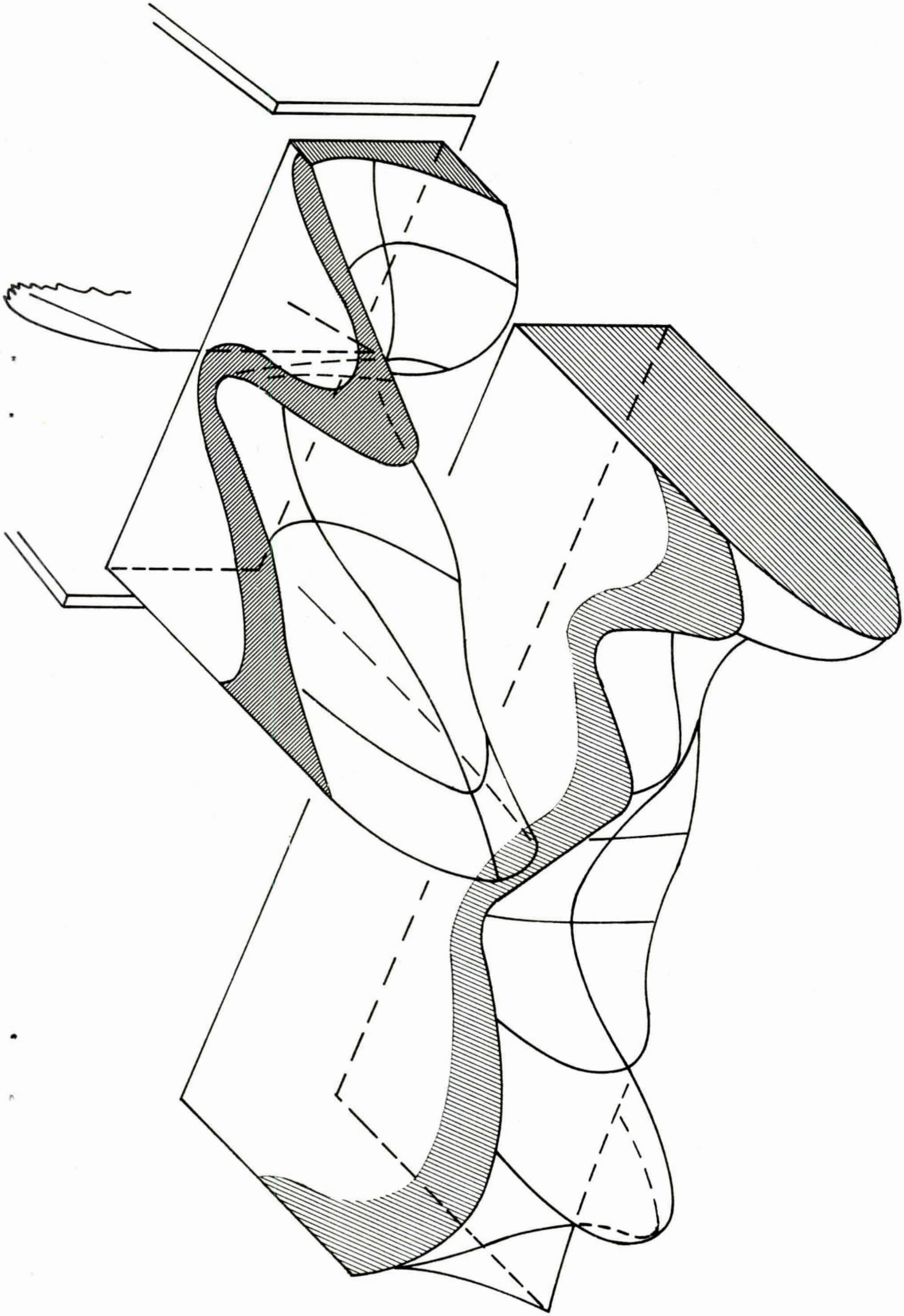

RUN 'E' AEROFOIL SPLITTER

FIG. 26

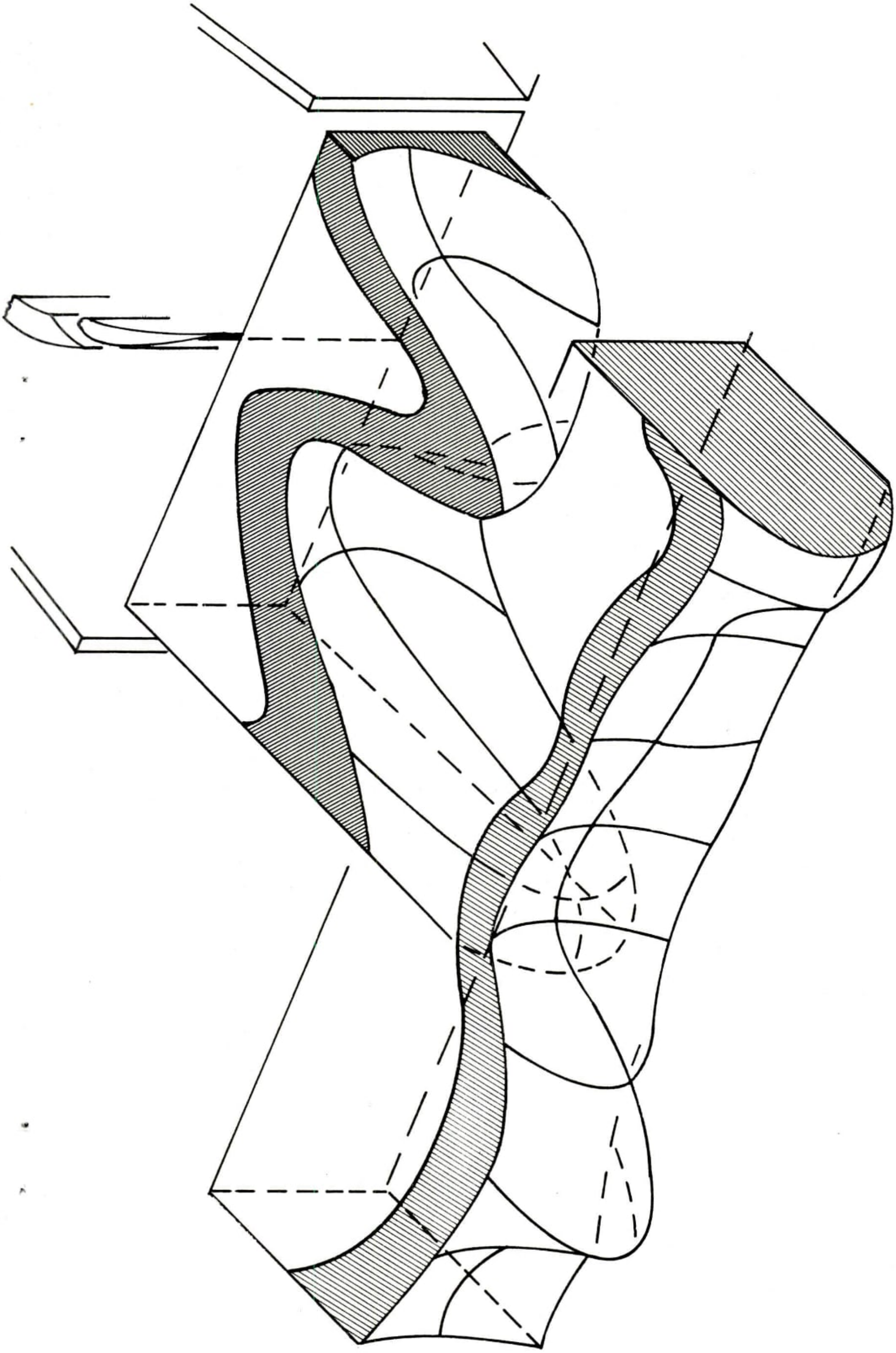

RUN 'F' SLOTTED AEROFOIL SPLITTER

FIG. 27