NRC Publications Archive
Archives des publications du CNRC

Two-dimensional imaging of soot volume fraction in laminar diffusion flames

Snelling, David; Thomson, Kevin; Smallwood, Gregory; Gulder, O.

This publication could be one of several versions: author's original, accepted manuscript or the publisher's version. / La version de cette publication peut être l'une des suivantes : la version prépublication de l'auteur, la version acceptée du manuscrit ou la version de l'éditeur.

NRC Publications Record / Notice d'Archives des publications de CNRC:
https://nrc-publications.canada.ca/eng/view/object/?id=47790f62-0850-478e-bd92-34944569b0d5
https://publications-cnrc.canada.ca/fra/voir/objet/?id=47790f62-0850-478e-bd92-34944569b0d5

Access and use of this website and the material on it are subject to the Terms and Conditions set forth at
https://nrc-publications.canada.ca/eng/copyright
READ THESE TERMS AND CONDITIONS CAREFULLY BEFORE USING THIS WEBSITE.

L'accès à ce site Web et l'utilisation de son contenu sont assujettis aux conditions présentées dans le site
https://publications-cnrc.canada.ca/fra/droits
LISEZ CES CONDITIONS ATTENTIVEMENT AVANT D'UTILISER CE SITE WEB.

Questions? Contact the NRC Publications Archive team at PublicationsArchive-ArchivesPublications@nrc-cnrc.gc.ca. If you wish to email the authors directly, please see the first page of the publication for their contact information.

Vous avez des questions? Nous pouvons vous aider. Pour communiquer directement avec un auteur, consultez la première page de la revue dans laquelle son article a été publié afin de trouver ses coordonnées. Si vous n'arrivez pas à les repérer, communiquez avec nous à PublicationsArchive-ArchivesPublications@nrc-cnrc.gc.ca.

National Research Council Canada
Conseil national de recherches Canada
Canada

TWO-DIMENSIONAL IMAGING OF SOOT VOLUME FRACTION IN LAMINAR DIFFUSION FLAMES*

D. R. Snelling, K. Thomson**, G. J. Smallwood , and Ö. L. Gülder

Combustion Group
National Research Council Canada
ICPET, Bldg. M-9
Ottawa, Ontario K1A OR6

**Mechanical Engineering Department
University of Waterloo
Waterloo, Ontario N2L 3G1

Introduction

In combustion research soot volume fraction measurements are important for studies of soot formation, radiation processes, and for monitoring post-flame particulates [1]. Light extinction is a commonly used diagnostic technique for measuring soot volume fraction. However, it suffers from the drawback of measuring a line-of-sight average, and while tomographic reconstruction can be used to calculate soot profiles in radially symmetric laminar flames, this is not possible in turbulent flames.

Laser induced incandescence (LII) has emerged as a promising technique for measuring spatially and temporally resolved soot volume fraction in flames. In LII the soot is heated by a short duration laser pulse to produce incandescence. However, LII does not presently provide absolute soot volume fractions and must be calibrated against other techniques.

To calibrate LII, and establish that the LII signal is linear with soot volume fraction over a wide dynamic range, requires a calibration source, whose soot volume fraction is known as accurately as possible. Laminar diffusion flames, which are radially symmetric two-dimensional flames with good stability, provide such a source. In fact much of the research work on soot formation and oxidation has been conducted using a standard coflow laminar diffusion flame. Fortunately there is the additional requirement to provide accurate soot measurements in this flame for other projects. The dependence of these soot fields on flame temperature, fuel type, and added diluents are an important source of information for understanding soot formation mechanisms [1].

Most studies of soot relied on sequential interrogation of the flame using narrow laser beams to provide spatial resolution. Typical fractional noise levels of 0.005 in the transmission measurements have been achieved over the fairly lengthy scans that are required to map a flame. This resulted in signal dynamic ranges of 50:1 over the range of attenuation levels found in these flames. In addition, the soot concentration gradients in these flames are often very high and flame movements or spatial reading errors of as little as 50 microns can be significant, yet most work has been performed with laser beams with a spatial resolution of 1 mm. With these problems in mind we have set out to design and build an optical system that would provide significantly more accurate line-of-sight attenuation 2-D maps of soot in laminar flames. Our target is a dynamic range of 250:1 (noise level of 0.001) and radial spatial resolution of 50 μm.

* For presentation at Combustion Institute Canadian Section, Spring Technical Meeting, May 25-27, 1998, University of Toronto, Toronto, Ontario.

Experimental

The laminar diffusion flame (fig.2) used in these studies is of a similar design to that used by other soot investigators [2]. It consists of a 10.9 mm inner diameter fuel tube, centered in a 100 mm diameter air nozzle. Before exiting the nozzle the air passes through a packed bed of glass beads and porous metal discs to prevent flame instabilities. The C_2H_4 fuel flow rate is 194 ml/min (smoke point) and the air flow 284 l/min. A flame enclosure made of flexible steel mesh protects the flame from air movements in the room while appropriate holes provide optical access. The burner assembly sits in a positioning platform with accurate vertical and horizontal movement capability.

The optical layout of the soot imaging experiments is shown in Fig.1. The objective of <0.001 noise in the transmission measurements dictates that the The fractional shot-noise in the flame images be lower than this. The target fractional shot noise is 0.0003, requires a signal of $>1/0.0003^2$ photoelectrons or $\sim 10^6$ counts (due to our detector sensitivity of ~ 10 photoelectrons/ADC count). In practice we have summed a 25 pixel region in a vertical direction giving a spatial resolution of $\sim$500 microns in that direction, which improves the signal-to-noise over that of a single pixel by $\sim 25^{0.5}$ or ~ 5. Thus a single pixel signal level of 200,000 counts or greater is sufficient to render detector shot noise insignificant. Since the A/D converter of our CCD is limited to 64,000 counts, 5 sequential images were acquired and summed to provide the required final image signal-to-noise ratio.

To account for potential intensity drifts in the lamp we recorded reference images (I_o) both before and after the flame image I. If the intensity varied linearly with time, an average of these two references would provide an accurate image to ratio the flame image to. Observation of regions of the image well beyond the flame shows that in practice there were often small residual differences between the I and averaged I_o images. A statistical analysis of sequential images showed that the distribution of intensities within an image (the standard deviation of the individual pixel values) was much more repeatable than the total image-to-image intensity. This was particularly true after the lamp had warmed up for 60 minutes, when the standard deviation of a ratioed image had fallen to that expected from the shot noise limit of the individual images. The ratio image I/I_o was divided up into strips of height 500 microns taken at 2mm intervals and, as a result of the above statistical observation, a secondary normalization was performed using the area of the image to one side of the flame, which was normalized to 1.0.

Figure 3 shows the intensity profile of 3 of the strips taken from a flame image along with a MathCad Loess smooth fit to the data, which represents the intensity in the super pixel (25 vertically by 1 horizontally). This image has been normalized as outlined above using the noise free region beyond the flame boundary (beyond 12 mm radially at a height of 8 mm). A single normalization factor is used for each image. The regions where the noise is high are clearly coincident with the appearance of structures in the ratio image, and correspond to regions of maximum beam steering. Figure 3 shows that the noise is low in the region of soot absorption. We routinely perform statistical analysis on the baseline data of each of the strips. The "noisy" and noise-free regions were analyzed separately to give the mean, standard deviation, and the standard deviation of the mean for each of the strips. (The standard deviation is the noise of a superpixel.) The noise (single standard deviation) in the signal is typically 0.0004 in the region beyond the flame and 0.007 in the region of maximum beam steering. The standard deviation the means is typically a factor of 10 less than this since approximately 100 pixels were averaged in each region. This analysis was

carried out for each image and the baseline was established to a precision of much less than the required 0.001.

Abel Inversion Algorithm

The one-dimensional tomography is performed using a three-point Abel inversion method. The algorithm used is that of Dasch [3] who compared Abel, onion-peeling, and filtered backprojection methods, and found the three point Abel method to be the best because of its low noise, robustness, and speed.

For particles in the Rayleigh limit, $(\pi d/\lambda) < 0.3$, the soot volume fraction f_v is given by

$$f_v = \frac{\ln(\tau) \cdot \lambda}{6\pi \cdot L \cdot E(m)} \tag{1}$$

where τ is the transmission, λ the wavelength, L the path length and $E(m) = -\mathrm{Im}\{(m^2 - 1)/(m^2 + 2)\}$. m is the complex refractive index of soot $m = k + ni$. Equation (1) can be written in its differential form as:

$$\frac{d\ln(\tau)}{dr}\left[\frac{\lambda}{6\pi \cdot L \cdot E(m)}\right] = f_v(r) \tag{2}$$

Each strip of the 2-D transmission measurements provides experimental values of τ versus r, the displacement from burner center. The Abel inversion of this data returns the quantity $d\ln(\tau)/dr$ versus r which, using Eq.(2), can be converted to radial profiles of soot volume fraction. Using the dispersion relationship from Dalzell and Sarofim [4] to calculate the refractive index of soot at 577 nm we obtain: m = 1.59+0.566i and $E(m)$ = 0.258.

Dasch [3] has shown that the noise in the inversion is inversely proportional to the spacing between the data [$\ln(\tau)$ values]. We have found that a data spacing of 100 microns provides the optimum resolution. Any further decrease in step size increased the inversion noise without adding any better definition of the soot profiles, even in the regions of maximum soot gradients. Figure 4 shows Abel inverted data in flame regions of low soot absorption, which is the worst-case scenario. It can be seen from Figs.3 and 4 that a peak absorption of as little as 1% provides sufficient signal-to-noise for the inversion.

The soot concentration in the C_2H_4/air flame was mapped using three separate images to cover the ~70 mm height of the flame. A complete flame measurement of soot concentration is shown in Fig.5(a), where we have shown one half of the symmetric flame. In Fig.5(b) the difference between two soot concentration maps, taken on different days, is shown. This plot shows a systematic difference between the flames recorded on different days. A detailed examination of the data for the two flames showed that the flame height of one flame was about 1.0-1.5% larger. This slightly larger flame had about 2.5% more total soot and the location of its maximum soot contour was consistently at a radial position 30-40 microns greater in the 25-40 mm height region (where the differences are maximum), providing a measure of the effective spatial resolution.

Concluding Remarks

We have demonstrated a technique for acquiring 2-D maps of flames that provide very low noise extinction maps. A noise level of 0.0007 in extinction and a spatial resolution of 30-40

μm for soot concentration was attained. The broadband arc-lamp source that also allowed us to avoid the added noise resulting from speckle with coherent laser sources. In addition to substantially improved sensitivity and spatial resolution, the 2-D technique provides a significant time saving over point measurements of transmission.

References

[1] Bockhorn, H.E., Soot Formation in Combustion (Mechanisms and Models), Springer-Verlag, New York, 1994.

[2] Gülder, Ö.L. and Snelling, D. R., "Influence of Nitrogen Dilution and Flame Temperature on Soot Formation in Diffusion Flames", *Combust.Flame*, v.92, pp.115-124, 1993.

[3] Dasch, C.J., "One-dimensional Tomography: A Comparison of Abel, Onion-Peeling, and Filtered Backprojection Methods", *Applied Optics*, v.31, pp.1146-52, 1992.

[4] Dalzell, W.H. and Sarofim, A.F., "Optical Constants of Soot and Their Application to Heat Flux Calculations", *Journal of Heat Transfer*, v.91, pp.100-104, 1969.

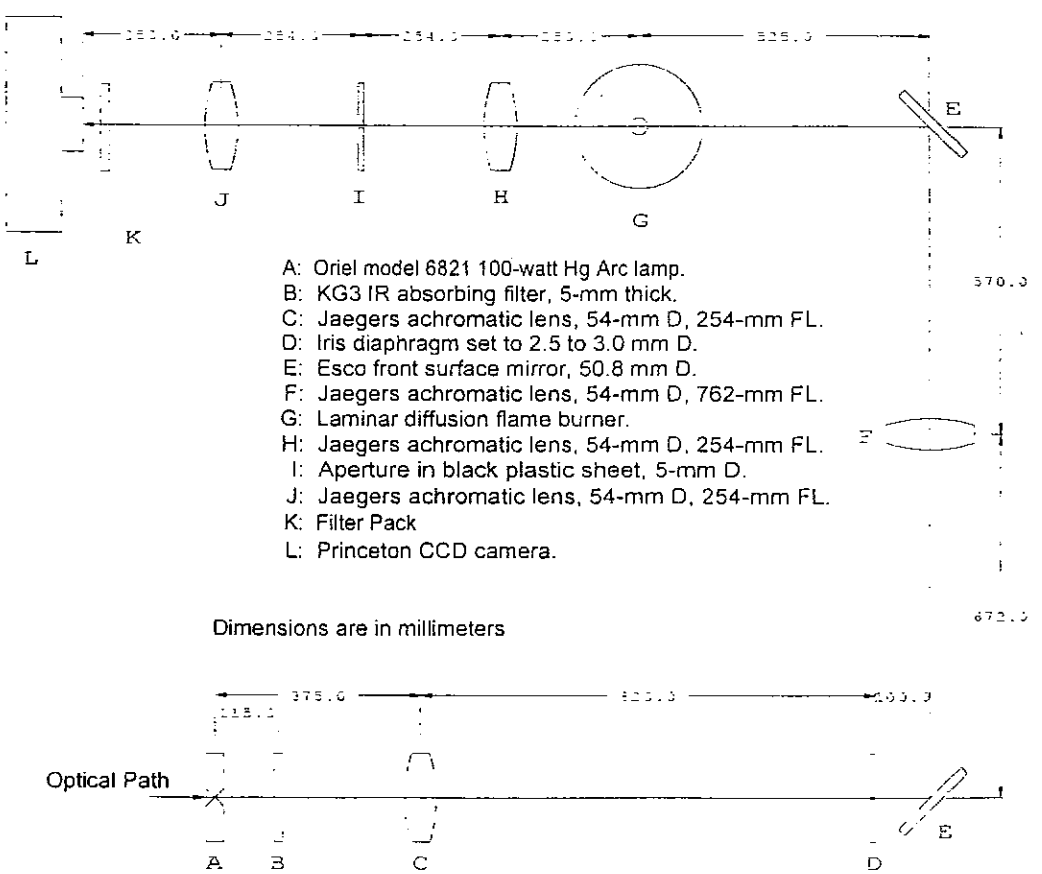

Figure 1. Optical lay-out for 2-D soot transmission measurements.

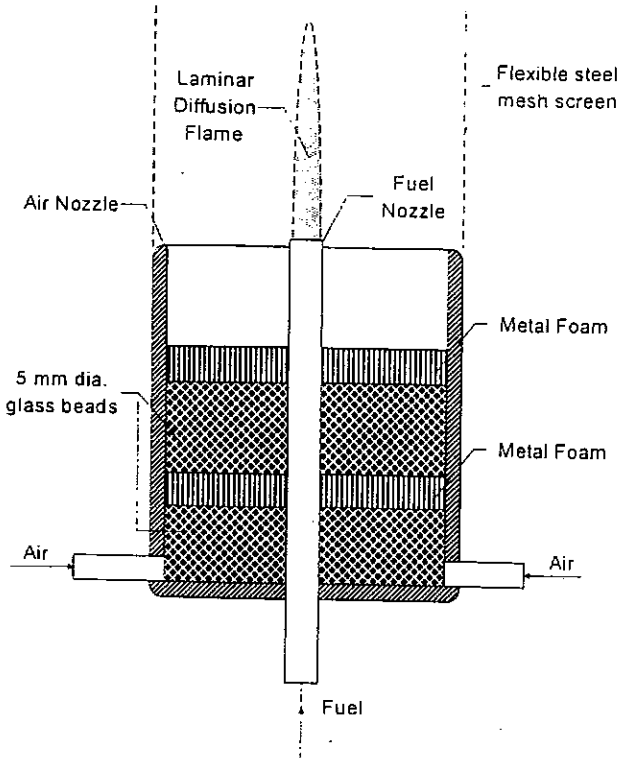

Figure 2. A schematic diagram of the laminar diffusion flame burner assembly

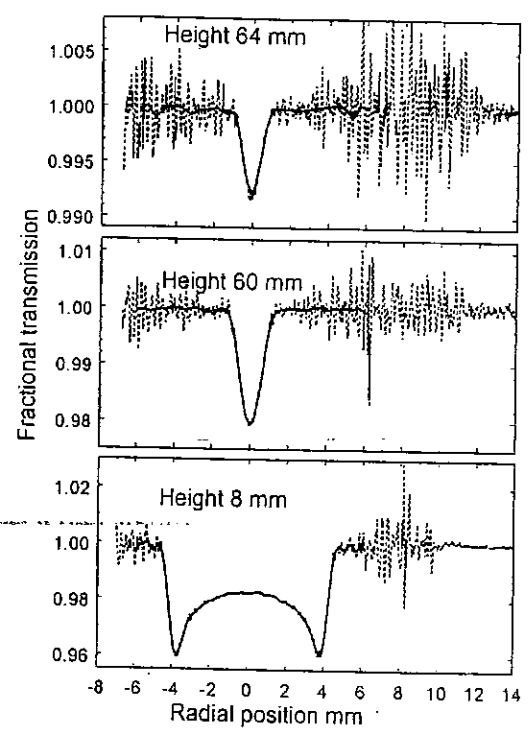

Figure 3. Three strips of the transmittance of a C_2H_4 /air diffusion flame taken from a 2-D image showing the original data (dashed line) and the MathCad Loess smooth of the data (solid line).

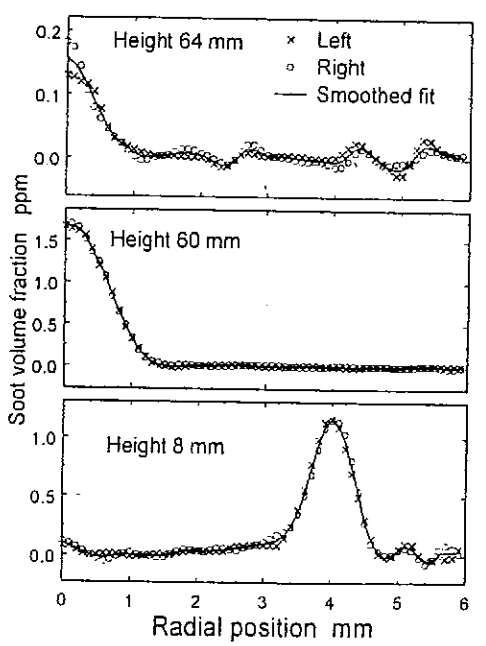

Figure 4. Abel inversion of the transmittance curves of Fig.3 showing the soot volume fraction determined from the right and left hand side of the image and a smoothed fit of both data sets.

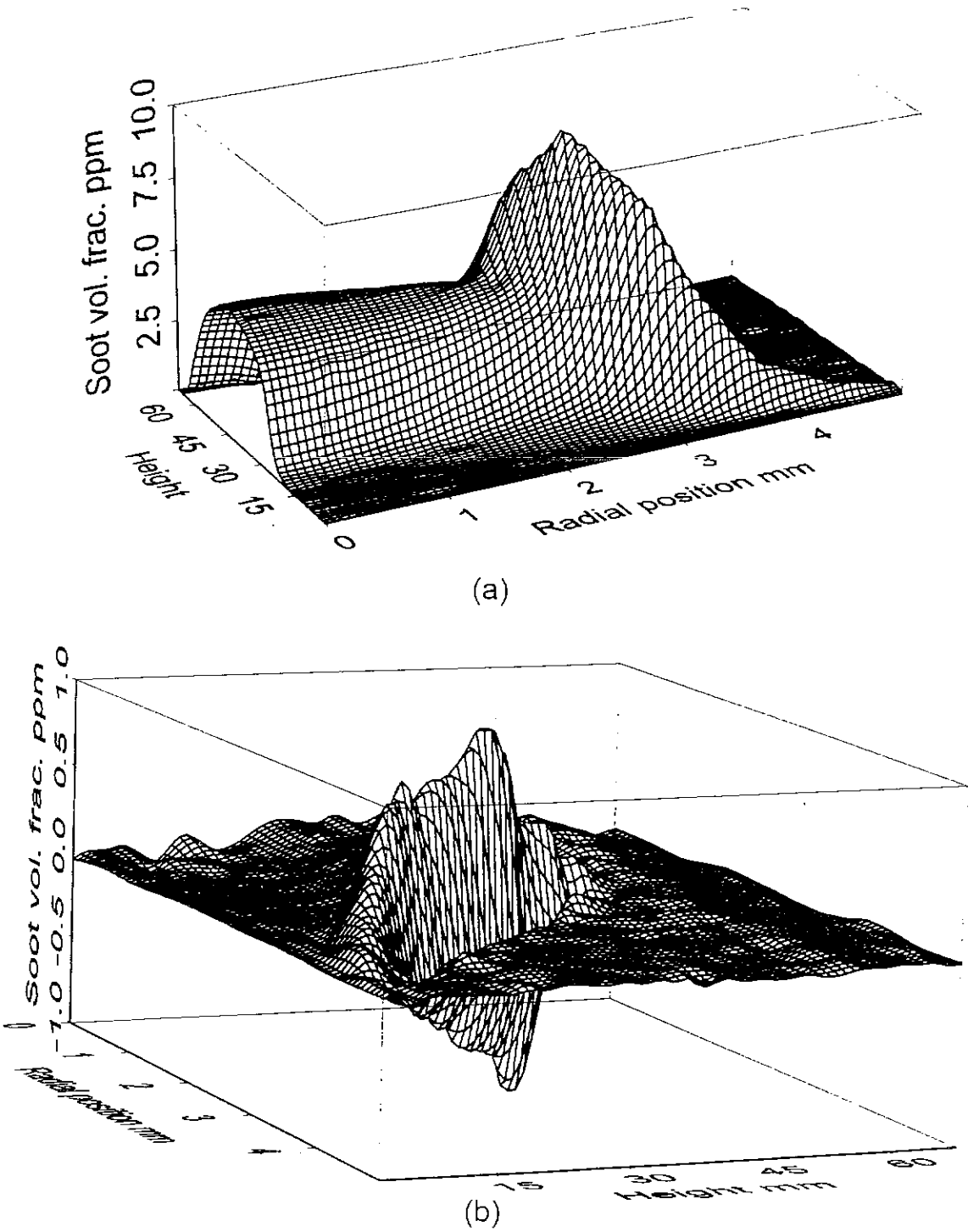

Figure 5. 3-D map of soot concentration in the C_2H_4 /air diffusion flame showing (a) a complete flame data set and (b) the difference between data sets taken on different days, showing impact of a 30-40 μm shift in radial position of peak soot concentration.

F. Liu

The Combustion Institute
Canadian Section

1998 Spring Technical Meeting

May 24-27, 1998
University of Toronto
Toronto, Ontario